Installation Instructions

Fronius Symo Advanced - Installation
10.0-3 208-240
12.0-3 208-240
15.0-3 480
20.0-3 480
22.7-3 480
24.0-3 480

EN-US | Installation instructions

42,0426,0296,EA 021-18082025

Table of contents

Safety 5
General 5
Electrical installations 5
Rapid shutdown 5
Installation location and position 7
Explanation of safety instructions 7
Safety 7
Intended Use 8
Location Selection 9
Installation position of the inverter 10
General Location Selection 11
Example: Installation of several inverters 12
Do not ground the solar modules. 12
Power Line Communication (PLC) transmitter 12

Preparation **15**

Attaching the Mounting Bracket 17
Safety 17
Selecting Dowels and Screws 17
Screw recommendation 17
Opening the Inverter 17
Installing the Mounting Bracket on a Wall 18
Attaching the mounting bracket to a metal carrier 19
Do not warp or deform the mounting bracket 19
Knockouts 21
Safety 21
General 21
Knocking or Drilling Out Knockouts 22

AC~ **25**

Suitable Grids 27
Connecting the inverter to the public grid (AC side) 28
Safety 28
Permitted cables 29
Preparing Aluminum Cables for Connection 31
Monitoring the grid 31
Connecting the Inverter to the Public Grid (AC) 31
Maximum AC Fuse Protection 32
Additional external AC and/or DC disconnect 33

DC= **35**

Connecting solar module strings to the inverter 37
Safety 37
String fuses 38
Permitted cables 39
General Information about Solar Modules 41
Connecting Aluminum Cables 41
Connecting Solar Module Strings to the Inverter 42

Laying Solar.Net Cables **45**

Data communication 47
Lay data communication cables 47
Installing Datamanager in the Inverter 48
Fail-Safe 49

Finally... **51**

Seal Conduits 53

Clipping the Inverter onto the Mounting Bracket 54
Clipping the Inverter onto the Mounting Bracket 54
Using for the first time 57
Using the Inverter for the First Time 57

Options **59**

USB Stick as a Data Logger and for Updating Inverter Software 61
USB Flash Drive as a Data Logger 61
Data on the USB thumb drive 61
Data Amount and Memory Capacity 62
Buffer Memory 63
Suitable USB Thumb Drives 63
USB Stick for Updating Inverter Software 64
Removing the USB Stick 64
Options 65
Options 65
OPTION 'ShadeCover' 65

Care and maintenance **67**

Notes on Maintenance 69
Maintenance 69
Cleaning 69

Safety

General

This manual contains important instructions for the inverter that must be followed during installation and maintenance of the inverter.

The inverter is designed and tested according to international safety requirements. Due to its electrical and electronic components, certain precautions must be taken when installing and operating the inverter.
In order to reduce the risk of injury to persons and to ensure safe installation and operation of the inverter, be sure to read these Operating Instructions carefully and follow all instructions and safety instructions.

Failure to observe the Operating Instructions and safety instructions can void the warranty and/or cause damage to the inverters or other property damage!

Electrical installations

All electrical installations must be carried out in accordance with the National Electrical Code, ANSI/NFPA 70, and any other codes and regulations applicable to the installation site.

For installations in Canada, the installations must be done in accordance with applicable Canadian standards.

Rapid shutdown

The **rapid shutdown (RSD)** can be triggered via **loss of the grid connection**: If the AC connection is lost, a rapid shutdown can be performed automatically. The inverter detects a loss of the AC connection and the lines are discharged to < 30 V_{DC} / 8 A / 240 VA and < 15 V_{AC} / 8 A / 240 VA. The inverter also interrupts the communication to the PV modules if they comply with the SunSpec standard for Rapid Shutdown.

In case a module-level shutdown equipment within the PV array is used in combination with the inverter, this labeling has to be used according to NEC (Section 690.12), CEC (64-218):

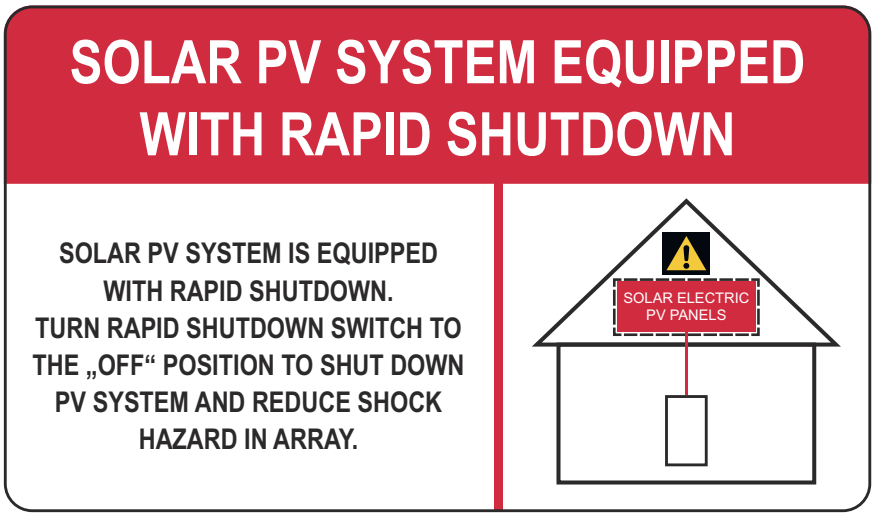

In case a string-level shutdown equipment at the PV array is used in combination with the inverter, this labeling has to be used according to NEC (Section 690.12), CEC (64-218).

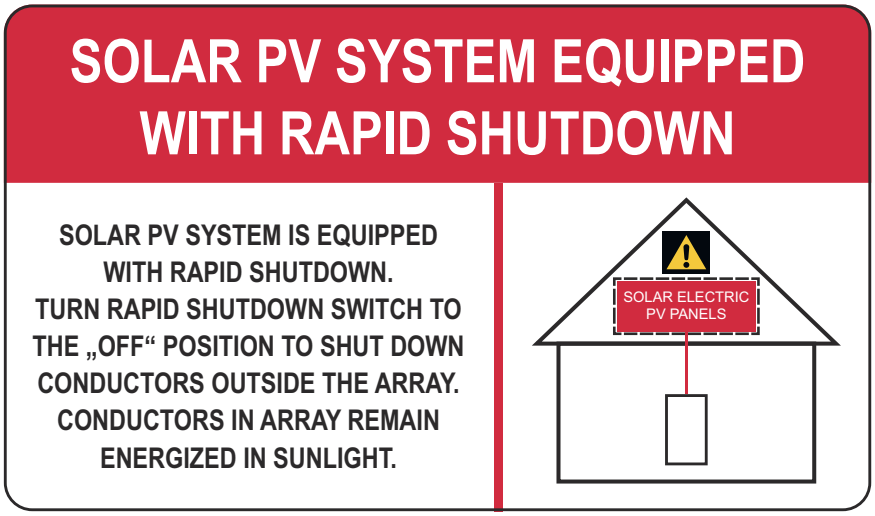

Warning! The installer is responsible for the correct labeling of the PV system. The rapid shutdown requirement of the inverter is not affected by the FRT (fault ride through) capability, so the inverter is „Grid support interactive compatible“

Warning! This photovoltaic rapid shutdown equipment (PVRSE) does not perform all of the functions of a complete photovoltaic rapid shutdown system (PVRSS). This PVRSE must be installed with other equipment to from a complete PVRSS that meets the requirements of NEC (NFPA 70) section 690.12, CEC 6 section 4-218 for controlled conductors outside the array. Other equipment installed in or on this PV system may adversly affect the operation of the PVRSS. It is the responsibility of the installer to ensure that the completed PV system meets the rapid shutdown functional requirements. This equipment must be installed according to the manufacturer´s installation instructions

Warning! Risk due to unsuitable location of the inverter. Failure or limited operation of the inverter can be the result

- Location according to the information in the user manual.
- Observe national regulations and guidelines for the installation of the inverter.
- Observe the specifications of the PV module manufacturer for the rear mounting of the inverter on PV modules.

Self-test

A self-test of the RSD function can be performed manually or automatically. The self-test only affects the discharge circuit of the RSD function. All other RSD circuit components are implemented in a single-failure-proof manner.

Automatic self-test sequence:
At each start - before switching on to the public network - the discharge circuit is activated for 10 ms if the DC voltage (40 V) is sufficient and the feedback pin is checked before and during charging.

Manual self-test sequence:
A manual self-test can be triggered by an interruption of the AC connection (e.g.: AC breaker).

The discharge must be measured and checked using a multimeter.

Self-test error automatic: AC_SystemFailure

Installation location and position

Explanation of safety instructions

⚠ WARNING!

Indicates a potentially dangerous situation.
- ▶ Death or serious injury may result if appropriate precautions are not taken.

⚠ CAUTION!

Indicates a potentially harmful situation.
- ▶ Minor injury or damage to property may result if appropriate precautions are not taken.

NOTE!

Indicates a possibility of flawed work results and possible damage to the equipment.

Please pay special attention when one of the symbols from the "Safety rules" chapter appears in these instructions.

Safety

⚠ WARNING!

Danger from incorrect operation and work that is not carried out properly.
This can result in severe personal injury and damage to property.
- ▶ Only qualified staff are authorized to commission the inverter and only within the scope of the respective technical regulations.
- ▶ Read the Installation Instructions and Operating Instructions before installation and commissioning.

⚠ WARNING!

Danger from work that is not carried out properly.
This can result in damage to property and severe personal injury.
- ▶ The surge protection device should only be installed and connected by licensed electricians.
- ▶ Observe the safety rules!
- ▶ Prior to all installation and connection work, disconnect the AC and DC supply to the inverter.

Fire Prevention

⚠ CAUTION!

Danger due to faulty or incorrect installation.
This may result in damage to inverters and other current-carrying parts of a photovoltaic system.
Faulty or improper installation may cause overheating of cables and terminals as well as the formation of arcs. This could cause thermal damage, which in turn may lead to fires.

Please note the following when connecting the AC and DC cables:
- ▶ Securely tighten all terminals using the proper torque listed in the Operating Instructions
- ▶ Securely tighten all grounding terminals (PE/GND) using the proper torque listed in the Operating Instructions, even for free grounding terminals
- ▶ Do not overload cables
- ▶ Check cables for damage and correct wiring
- ▶ Follow all safety instructions, Operating Instructions, and any local connection regulations

- ▶ Always secure the inverter to the mounting bracket with fixing screws using the torque specified in the Operating Instructions.
- ▶ Only put the inverter into operation with the fixing screws securely tightened.

The manufacturer's specifications for connection, installation, and operation must be observed. You must carefully follow all installation steps and make all connections in accordance with specifications and regulations to minimize any risk of danger.
The tightening torques for the respective terminals are listed in the Installation Instructions for the devices.

Intended Use

The inverter is designed exclusively to convert direct current from solar modules into alternating current and feed this power into the public grid.
The following are deemed to be not in conformity with its intended purpose:
- Utilization for any other purpose, or in any other manner
- Alternations to the inverter are not expressly recommended by Fronius
- Installation of components that are not expressly recommended or sold by Fronius.

The manufacturer is not responsible for any damage resulting from improper use. All warranty claims are considered void in such cases.

Proper use also means
- carefully reading and obeying the instructions and all the safety and danger notices in the Operating and Installation Instructions
- compliance with the maintenance operations
- installation as specified in the Installation Instructions

When configuring the photovoltaic system, make sure that all components are operating completely within their permitted operating range.

All measures recommended by the solar module manufacturer for maintaining solar module properties must be followed.

Follow all grid operator regulations regarding grid power feed and connection methods.

Location Selection

Please note the following criteria when choosing a location for the inverter:

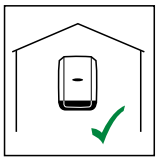

The inverter is suitable for indoor installation.

The inverter is suitable for outdoor installation.

Because of its NEMA 4X protection class, the inverter is not susceptible to hose water on any side and can also be operated in moist environments. However:

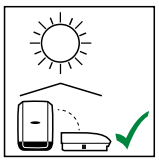

In order to keep inverter heating as low as possible, do not expose the inverter to direct sunlight. The inverter should be installed in a protected location, e.g., near the solar modules or under an overhanging roof.

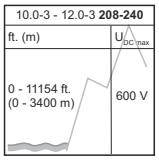

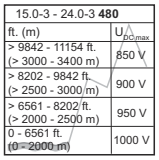

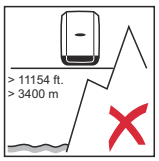

IMPORTANT! The inverter must not be installed or operated above an altitude of 11,154 ft. (3400 m).

The maximum permissible DC voltage of the inverter depends on the altitude.

U_{DCmax} at an altitude of:

Symo Advanced 10.0-3–12.0-3 208–240
0 to 11,154 ft (0 to 3400 m). = 600 V

Symo Advanced 15.0-3–24.0-3 480
0 to 6561 ft (0 to 2000 m). = 1000 V
6531 to 8202 ft (2000 to 2500 m). = 950 V
8202 to 9842 ft (2500 to 3000 m). = 900 V
9842 to 11,154 ft (3000 to 3400 m). = 850 V

The output power reduces when the device temperature is too high, and this may occur earlier than normal at increased altitudes.

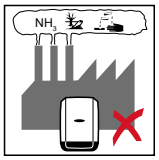

Do not install the inverter:
- where it may be exposed to ammonia, corrosive gases, acids, or salts
  (e.g., fertilizer storage areas, vent openings for livestock stables, chemical plants, tanneries)

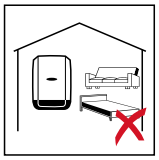

During certain operating phases the inverter may produce a slight noise. For this reason, it should not be installed in an occupied living area.

	Do not install the inverter in: - areas where there is an increased risk of accidents from farm animals (horses, cattle, sheep, pigs, etc.) - Stables or adjoining areas - storage areas for hay, straw, chaff, animal feed, fertilizers, etc.
	The inverter is designed to be dustproof in principle. However, in areas of high dust accumulation, the cooling surfaces can become dusty, which can impair the thermal performance. In this case, the dust must be removed regularly. We therefore recommend that installation is not carried out in areas and environments with high dust accumulation (e.g., iron filings) as this can cause damage to the inverter.
	Do not install the inverter in: - Greenhouses - Storage or processing areas for fruit, vegetables, or viticulture products - Areas used in the preparation of grain, green fodder, or animal feeds

Installation position of the inverter

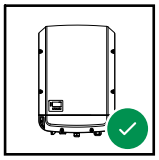	The inverter is suitable for vertical installation on a vertical wall or column.
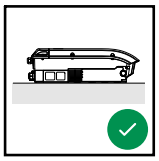	The inverter is suitable for a horizontal installation position.
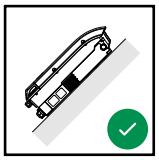	The inverter is suitable for installation on a sloping surface.
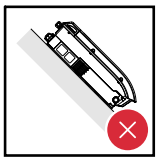	Do not install the inverter on a sloping surface with the connections upwards.
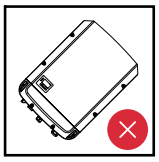	Do not install the inverter in a sloping position on a vertical wall or column.
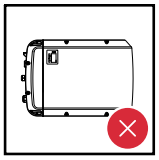	Do not install the inverter in a horizontal position on a vertical wall or column.

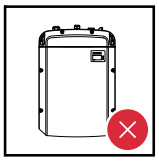
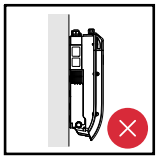

Do not install the inverter with the connections upwards on a vertical wall or column.

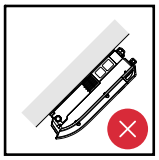

Do not install the inverter overhanging with the connections upwards.

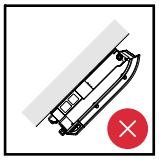

Do not install the inverter overhanging with the connections downwards.

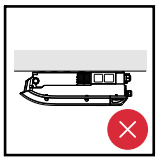

Do not install the inverter on the ceiling.

General Location Selection

Please note the following criteria when choosing a location for the **inverter**:

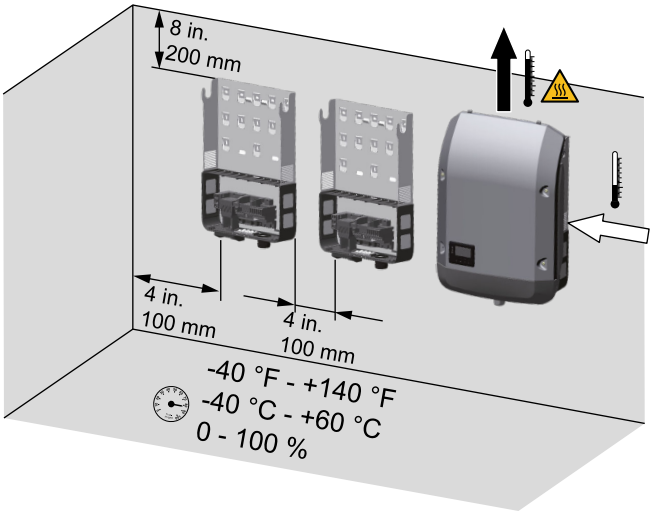

Only install on a solid, non-flammable surface
Max. ambient temperatures: -40 °F/+140 °F (-40 °C/+60 °C)
Relative humidity: 0–100%
The air flow direction within the inverter is from right to top (cold air intake on the right, hot air outflow at the top). The waste air may reach a temperature of up to 70 °C.

When installing the inverter in a switch cabinet or similar closed environment, it is necessary to make sure that the hot air that develops will be dissipated by forced-air ventilation
If you wish to install the inverter on the outer walls of cattle stables, it is important to keep a minimum clearance of 2 m between all sides of the inverter and air vents and other openings. The place of installation should not be exposed to ammonia, corrosive gases, salts, or acids.

Example: Installation of several inverters

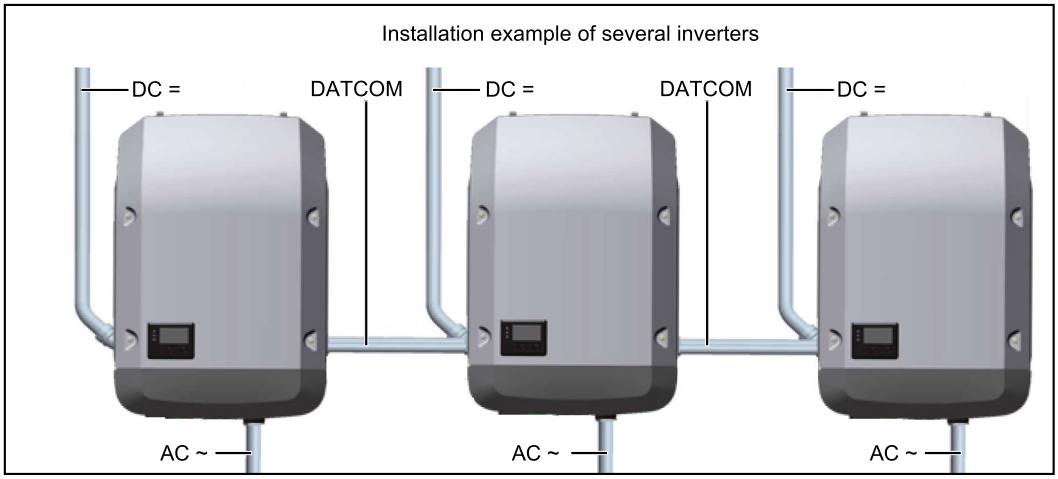

Do not ground the solar modules.

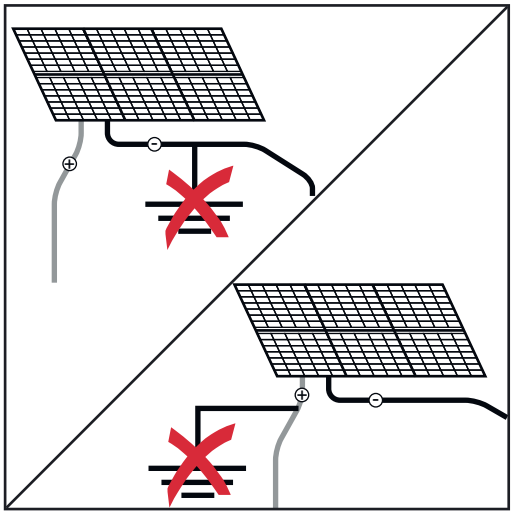

The inverter is designed exclusively for connection to and use with non-grounded solar modules. The solar modules must not be grounded at either the positive or negative pole.

Power Line Communication (PLC) transmitter

The inverter is equipped with a Power Line Communication (PLC) transmitter on the DC side. Its function is to ensure rapid shutdown in accordance with National Electric Code NEC 2023 Art. 690.12 and Canadian Electrical Code CSA C22.1:24 Art. 64-218. The PLC is implemented according to the specification “Communication Signal for Rapid Shutdown – SunSpec Interoperability Specification” (depending on national grid setup). Please visit www.sunspec.org for details.

To ensure compliance with all applicable regulations in your country and to ensure optimal reception among all recipients, please follow the recommendations below:

- Keep the distance between the DC+ and DC- conductors as small as possible
- Avoid cable loops caused by cables that are too long (coil effect)
- Use metal cable ducts where possible
- Do not place DC cables from different inverters in the same cable duct or cable tray

Preparation

Attaching the Mounting Bracket

Safety

⚠ WARNING!

Danger of residual voltage from capacitors.
An electric shock can be fatal.
- ▶ Wait until the capacitors have discharged. Discharge takes 5 minutes.

⚠ CAUTION!

Danger due to soiling or water on the terminals and contacts in the connection area.
This may result in damage to the inverter.
- ▶ When drilling, make sure that terminals and contacts in the connection area do not become soiled or wet.
- ▶ The mounting bracket without integrated inverter does not correspond to the degree of protection according to the data sheet. For this reason do not leave the mounting bracket exposed to environmental influences without the inserted inverter.
- ▶ Protect the mounting bracket from soiling and moisture during installation.

NOTE!

Protection class NEMA4X is only ensured when the inverter is mounted and firmly screwed into the mounting bracket.
The mounting bracket without inverter and ventilation channel has no NEMA protection.

Selecting Dowels and Screws

Important! Depending on the surface, different mounting materials may be required for installing the mounting bracket. These mounting materials are not part of the scope of delivery for the inverter. The installer is responsible for selecting the proper mounting materials.

Screw recommendation

For the installation of the inverter we recommend steel or aluminum screws with a diameter of 0.2–0.3 in. (6–8 mm).

Opening the Inverter

⚠ WARNING!

Danger due to inadequate ground conductor connection.
This can result in severe personal injury and damage to property.
- ▶ The housing screws provide an adequate ground conductor connection for grounding the housing and should not be replaced under any circumstances by other screws that do not provide a reliable ground conductor connection.

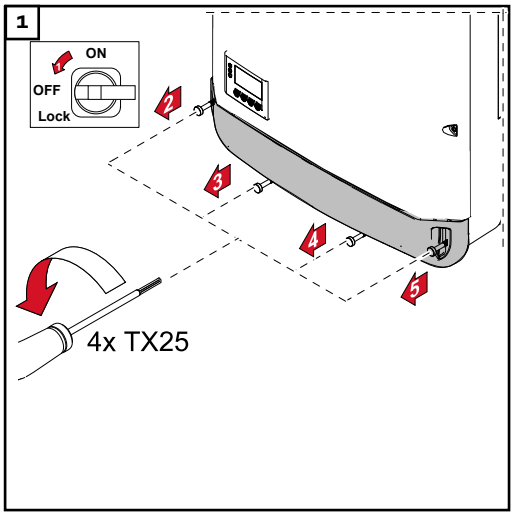

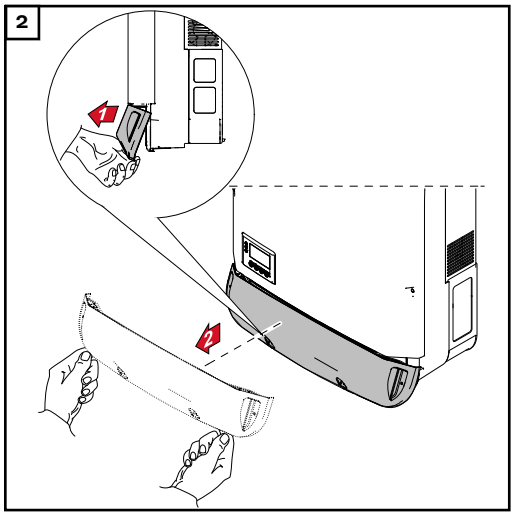

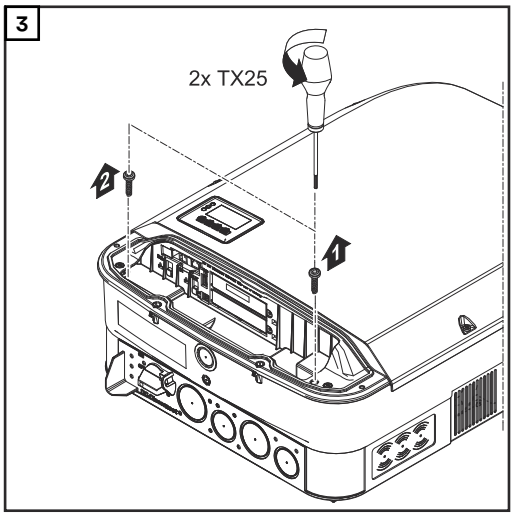

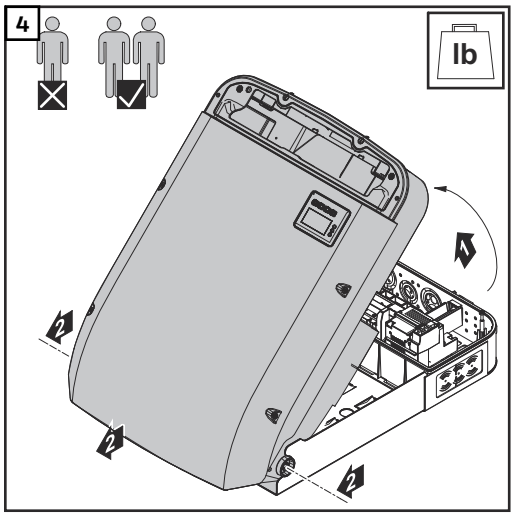

Installing the Mounting Bracket on a Wall

The mounting bracket must be secured in at least four places.

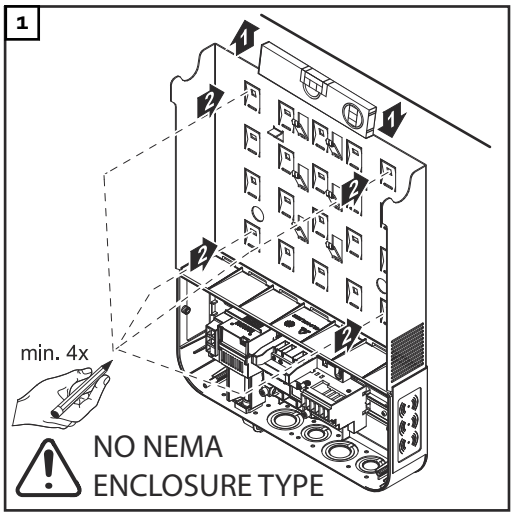

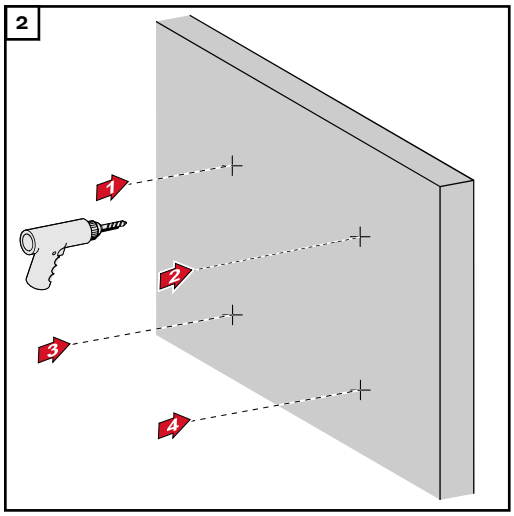

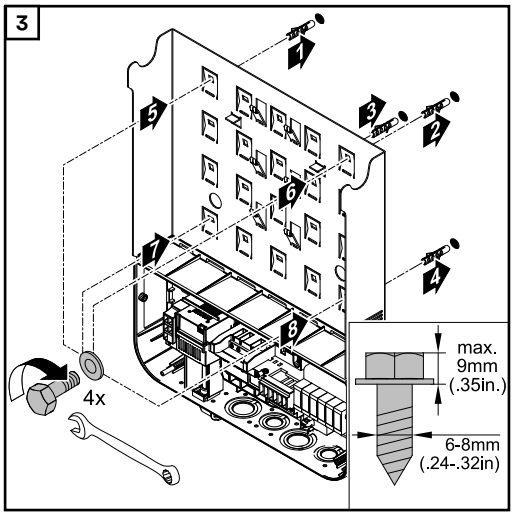

Attaching the mounting bracket to a metal carrier

> *NOTE!*
>
> **When mounted on metal supports, the inverter must not be exposed to rainwater or splashing water from the rear.**
> Provide suitable rainwater protection or splash water protection.

The mounting bracket must be secured in at least four places.

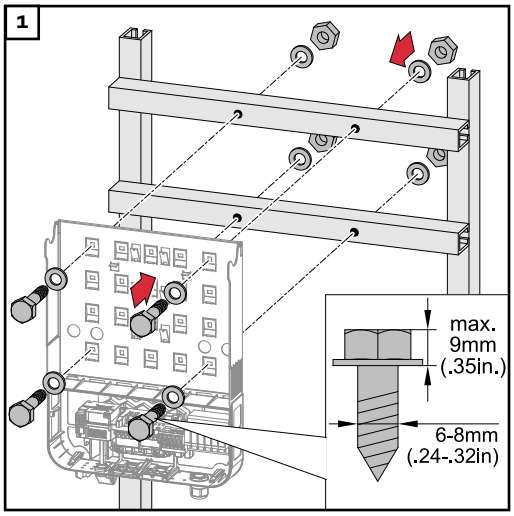

Do not warp or deform the mounting bracket

Notice! When attaching the mounting bracket to the wall or to a column, make sure that the mounting bracket is not warped or deformed.

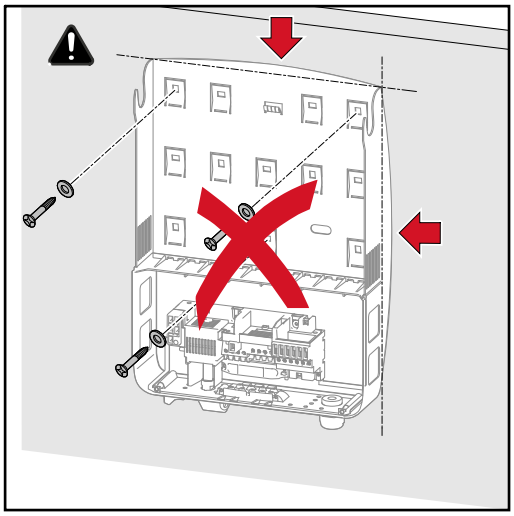

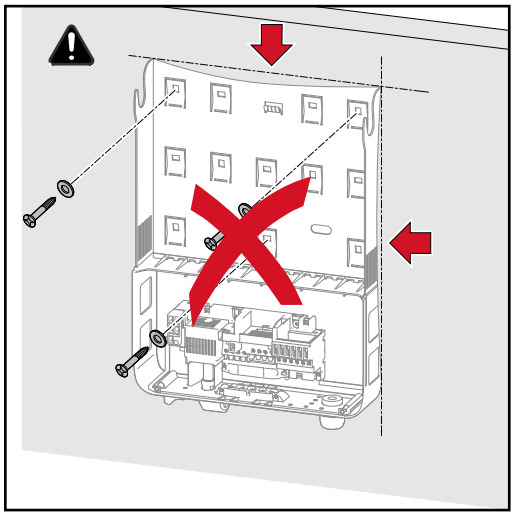

Knockouts

Safety

CAUTION!

Danger of short circuit from loose metal parts from knockouts.
Loose metal parts in the inverter may cause short circuits when the inverter is powered up. When removing knockouts, make sure that

- ▶ no loose metal parts fall into the connection area of the inverter,
- ▶ any metal pieces that do fall into the connection area are removed immediately.

NOTE!

When using the cable inlets at the back, take care to seal them according to protection class NEMA4X before operating outdoors.

NOTE!

When installing outdoors, only use waterproof conduit fittings and conduits.
Conduit fittings and conduits are not part of the scope of supply for the inverter.

General

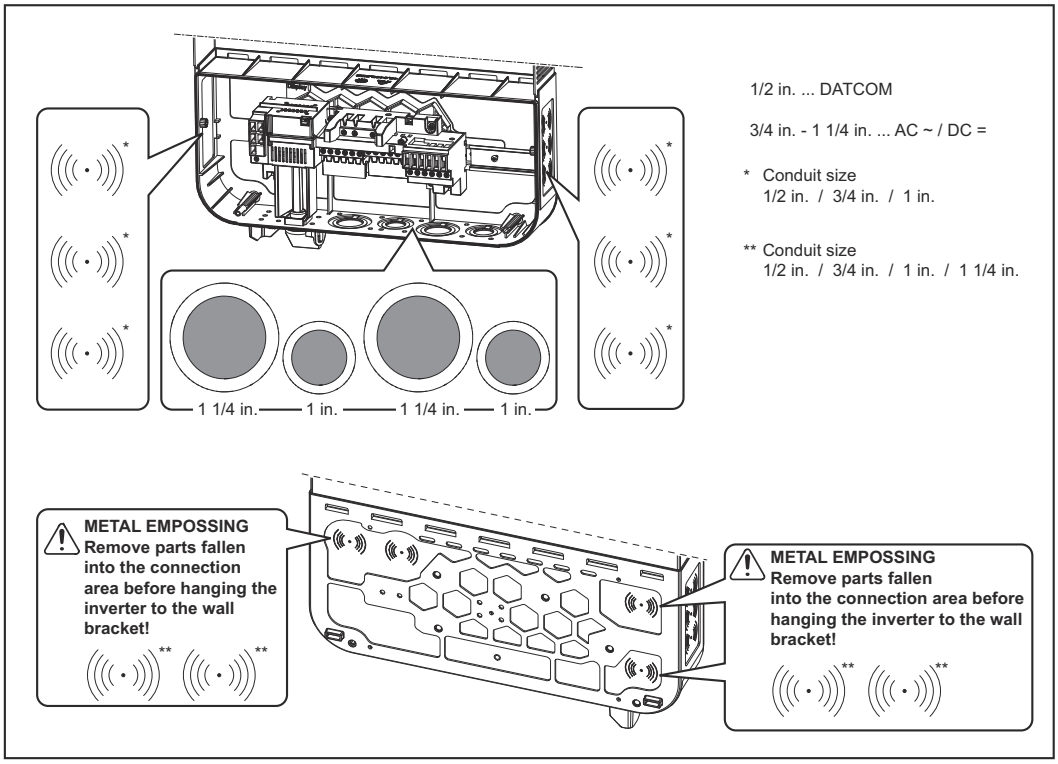

The wall bracket contains several knockouts of different sizes. When knocked out, the openings are used for the inputs of various wires.

1/2 in. for data communication cable (DATCOM)
3/4 in. for AC and DC cables
- 1 1/4
in.

* A grounding electrode terminal (GET) may be required depending on local regulations.
The cable for the grounding electrode terminal can be fed through the designated opening on the underside of the wall bracket.

IMPORTANT! The knockouts on the rear of the wall bracket are made of metal.

Knocking or Drilling Out Knockouts

IMPORTANT! The knockouts on the underside of the mounting bracket may be knocked out using a hammer or screwdriver, drilled out using a step drill, or opened using a hole punch. The side knockouts and the knockouts at the back may only be drilled out with a step drill or opened with a hole punch.

IMPORTANT! You should only remove the minimum number of knockouts required for the available cables.

Use suitable eye protection when knocking/drilling out the knockouts.
Only knock out knockouts using a hammer or screwdriver from the inside outwards.
Only use suitable step drills to drill out the knockouts. Do not use spiral drills for drilling out!
Only drill out knockouts using a step drill from the outside inwards.
When drilling out using a step drill, ensure that the inside of device (e.g. connection block) is not damaged.
When drilling out the knockouts at the back, place the mounting bracket on an even surface with the back upwards so that shavings and pieces of metal can fall out of the mounting bracket.
Attach appropriate conduits to all knocked/drilled out knockouts. In the event of installation outside, only use watertight conduits and conduit fittings. Conduits and conduit fittings are not included with the inverter.
If necessary, deburr the number of knockouts required with a suitable tool.

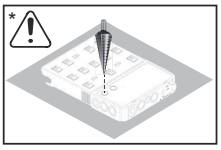

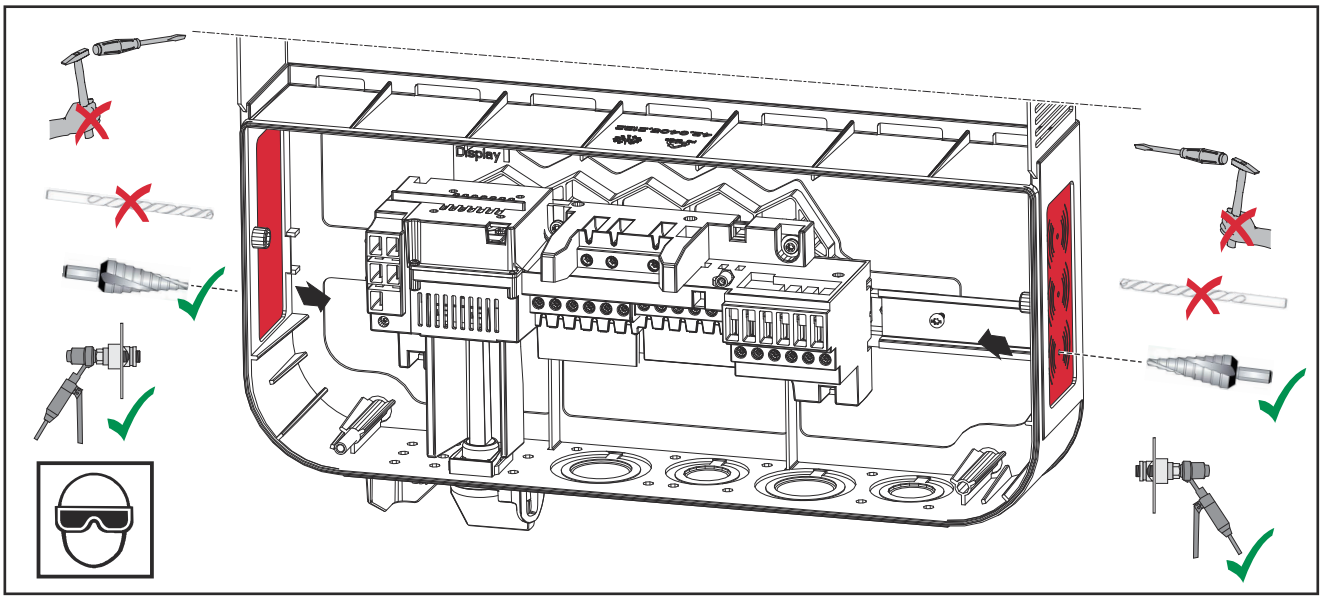
Display

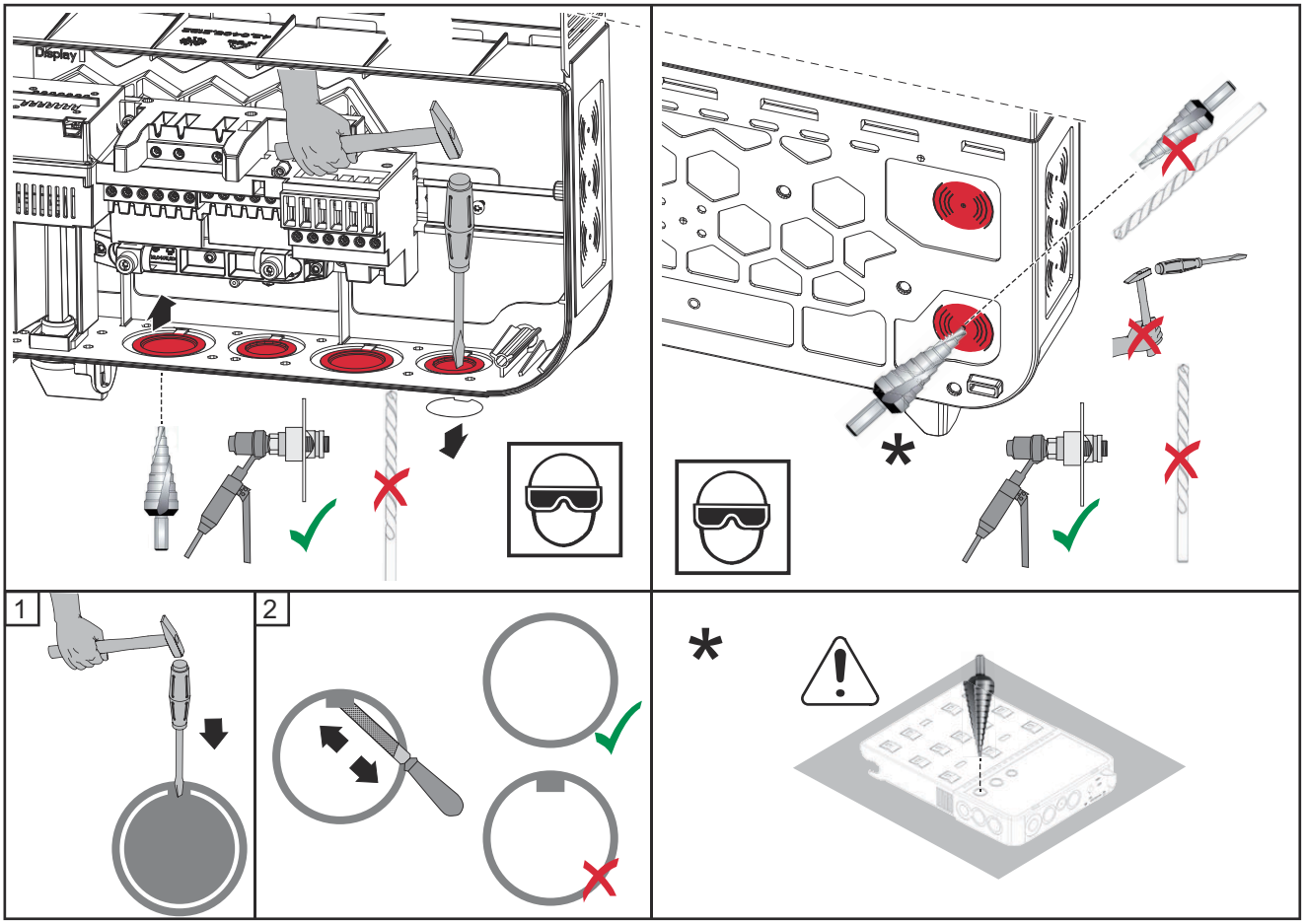
Display
*
1
2
*

AC~

Suitable Grids

Delta	No neutral conductor		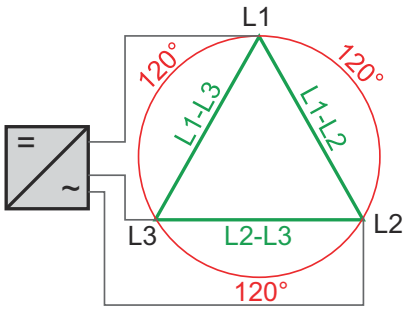
Setup:	Nominal voltage:	Appropriate inverter:	
208	208 V	Symo Advanced	
240	240 V	10.0-3 208–240 /	
220	220 V	12.0-3 208–240	
BR	220 V		
50 Hz	50 Hz 208–240 V		
MG 3P	Microgrid 208 V		
MG 1P	Microgrid 240 V		

WYE	Neutral conductor required		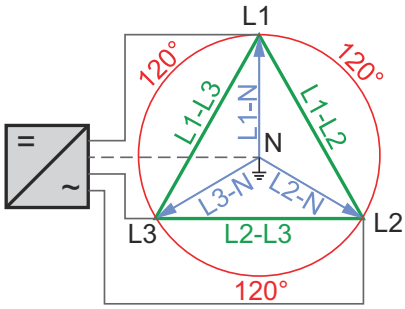
Setup:		Appropriate inverter:	
208 N	Nominal voltage:	Symo Advanced	
220 N	208 V	10.0-3 208–240 /	
BR N	220 V	12.0-3 208–240	
50 HN	220 V		
HI2	50 Hz 208–240 V		
	208 V		
480 N			
440 N	480 V	Symo Advanced	
50 HN	440 V	15.0-3 480 / 20.0-3	
	50 Hz 415 V	480 / 22.7-3 480 /	
MG 3N		24.0-3 480	
MG 2N	Microgrid 208 V		
MG 5N	Microgrid 50 Hz 208–		
MG 6	240 V		
	Microgrid 50 Hz 480 V		
CAL3	Microgrid 480 V		
HI3			
	480 V		
	480 V		

Hi-Leg Delta	Neutral conductor required		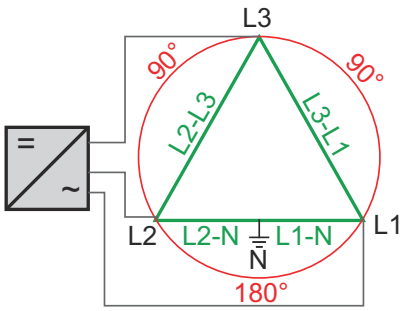
Setup:	Nominal voltage:	Appropriate inverter:	
240 N	240 V	Symo Advanced	
50 HN	50 Hz 208–240 V	10.0-3 208–240 /	
		12.0-3 208–240	
MG 1N	Microgrid 240 V		
MG 2N	Microgrid 50 Hz 208–		
	240 V		
HI1			
	208 V		

Connecting the inverter to the public grid (AC side)

Safety

⚠ WARNING!

Danger from grid voltage and DC voltage from solar modules that are exposed to light.
An electric shock can be fatal.
- ▶ Prior to all connection work, disconnect the AC and DC supply to the inverter.
- ▶ The DC main switch is used only to switch off power to the power stage set. When the DC main switch is turned off, the connection area is still energized.
- ▶ Maintenance and service work on the inverter power stage set should only be carried out by Fronius-trained service technicians.
- ▶ All maintenance and service work should only be carried out when the inverter and the mounting bracket have been disconnected from each other.
- ▶ The inverter must only be disconnected from the mounting bracket after being disconnected from the mains power.
- ▶ Only an authorized electrician is permitted to connect this inverter to the public grid.

⚠ WARNING!

Inadequately sized electrical components can cause serious injury and damage to property.
An electric shock can be fatal.
- ▶ All electrical connections must be made in accordance with the national standard (e.g., for the US National Electrical Code, ANSI/NFPA 70) and any other regulations applicable to the installation site.
- ▶ Use min. 194 °F (90 °C) copper wire for all grounding wires (see NEC table 250.122).
- ▶ For all AC/DC wires, use a minimum of 167 °F (75 °C).
- ▶ Voltage drop and other considerations, such as improving power quality, may mean larger cable cross sections need to be used.

⚠ WARNING!

Danger from work that is not carried out properly
This can result in damage to property and severe personal injury.
- ▶ The surge protection device should only be installed and connected by licensed electricians.
- ▶ Observe the safety rules!
- ▶ Prior to all installation and connection work, disconnect the AC and DC supply to the inverter.

⚠ CAUTION!

Danger due to improperly connected terminals.
This may result in thermal damage to the inverter, which in turn may lead to fires.
- ▶ When connecting the AC and DC cables, make sure that all terminals are tightened securely using the proper torque.

NOTE!

When connecting aluminum cables:

- ▶ Follow all national and international guidelines regarding the connection of aluminum cables.
- ▶ Follow the instructions of the cable manufacturer, especially the note about whether an annual check to ensure that the cables are firmly attached should be performed.

NOTE!

Form a min. 4 in. (100 mm) cable loop with all cables.

NOTE!

To ensure that the inverter operates without any problems:

- ▶ Make sure that the grid's neutral conductor is grounded. For insulated networks (without grounding), this is not the case, and operation of the inverter is not possible.
- ▶ A neutral conductor is required for measurement purposes when operating the inverter. The neutral conductor must have a current carrying capacity of at least 1 A.

Permitted cables

AC cables with the following design can be connected to the AC terminals of the inverter:

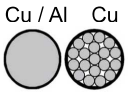

- Copper (Cu) or aluminum (Al): round, solid
- Copper: round, stranded

AC & DC = copper cables (Cu)
The following wire combinations can be used for wiring.
Select a sufficiently large cable cross-section based on the actual device output!

AWG round	AWG stranded	AWG stranded/round			AWG round/round				AWG stranded/stranded			
4 [2]												
6 [2]	6/6 [4]									6/12 [2]	6/14 [2]	6/16 [3]
8 [2]	8 [1]	8/10 [1]	8/12 [1]	8/14 [1]		8/12 [2]			8/10 [2]	8/12 [1]	8/14 [1]	8/16 [3]
10 [2]	10 [1]				10/10 [1]	10/12 [1]	10/14 [1]		10/10 [1]	10/12 [1]	10/14 [1]	10/16 [3]
12 [2]	12 [1]				12/10 [1]	12/12 [1]	12/14 [1]	12/16 [1]	12/10 [1]	12/12 [1]	12/14 [1]	12/16 [1]
14 [2]	14 [1]				14/10 [1]	14/12 [1]	14/14 [1]	14/16 [1]	14/10 [1]	14/12 [1]	14/14 [1]	14/16 [1]
16 [3]	16 [3]						16/14 [1]	16/16 [1]	16/10 [3]	16/12 [1]	16/14 [1]	16/16 [1]

AC & DC = aluminum cables (Al)
The following wire combinations can be used for wiring.
Select a sufficiently large cable cross-section based on the actual device output!

AWG round	AWG stranded	AWG stranded/round			AWG round/round				AWG stranded/stranded			
4 [2]												
6 [2]	6 [4]									6/12[2]	6/14[2]	6/16[5]
8 [2]	8 [2]	8/10[2]	8/12[2]	8/14[2]		8/12[2]			8/10[2]	8/12[2]	8/14[2]	8/16[5]
10 [2]	10 [2]				10/10 [2]	10/12[2]	10/14[2]		10/10 [2]	10/12[2]	10/14[2]	10/16 [5]
12 [2]	12 [2]				12/10[2]	12/12[2]	12/14[2]		12/10[2]	12/12[2]	12/14[2]	12/16[2]
14 [2]	14 [2]				14/10[2]	14/12[2]	14/14[2]	14/16[2]	14/10[2]	14/12[2]	14/14[2]	14/16[2]
16 [5]	16 [5]						16/14[2]	16/16[2]	16/10 [5]	16/12[2]	16/14[2]	16/16[2]

1) tested and inspected as per UL
2) not inspected as per UL; connection possible
3) with ferrules only
4) use stranded PV (ZKLA) or 2-wire
5) not inspected as per UL; connection possible; AWG 16 with ferrules only

AC~ Minimum AWG in acc. to NEC

		10.0-3 208–240	12.0-3 208–240
Copper (Cu)/aluminum (Al)	208 VAC	AWG 10/AWG 10	AWG 10/AWG 8
	220 VAC	AWG 10/AWG 10	AWG 10/AWG 8
	240 VAC	AWG 12/AWG 10	AWG 10/AWG 10

		15.0-3 480	20.0-3 480	22.7-3 480
Copper (Cu)/aluminum (Al)	440 V AC	AWG 14/AWG 12	AWG 10/AWG 10	AWG 8/AWG 8
	480 V AC	AWG 14/AWG 12	AWG 12/AWG 10	AWG 10/AWG 8

		24.0-3 480
Copper (Cu)/aluminum (Al)	480 V AC	AWG 10/AWG 10

Preparing Aluminum Cables for Connection

The AC-side terminals are designed for connecting single-wire, round aluminum cables. Due to the reaction of aluminum with air that creates a tough, non-conductive oxide layer the following points must be considered when connecting aluminum cables:

- Reduced rated currents for aluminum cables
- The connection requirements listed below

Always follow the instructions of the cable manufacturer when using aluminum cables.

Take into account local specifications when configuring cable cross sections.

Connection Requirements:

1. Carefully clean off the oxide layer of the stripped end of the cable, e.g., using a knife

IMPORTANT! Do not use brushes, files, or sandpaper; aluminum particles may get stuck and can transfer to other cables.

2. After removing the oxide layer of the cable end, rub in a neutral grease, e.g., acid-free and alkali-free Vaseline
3. Then immediately connect it to the terminal

IMPORTANT!Repeat the steps above whenever the cable is disconnected and then reconnected.

Monitoring the grid

The resistance in the leads to the AC-side connection terminals must be as low as possible for optimal functioning of grid monitoring.

Connecting the Inverter to the Public Grid (AC)

NOTE!

To ensure a proper ground connection, all grounding terminals GND must be tightened with the specified torque during installation.

NOTE!

Form loops of at least 4 in. (102 mm) in the AC cables when connecting them to the AC terminals.

IMPORTANT! The ground conductor GND of the AC cable must be laid so that it is disconnected last.
Measure the ground conductor GND longer, for example, and loop.

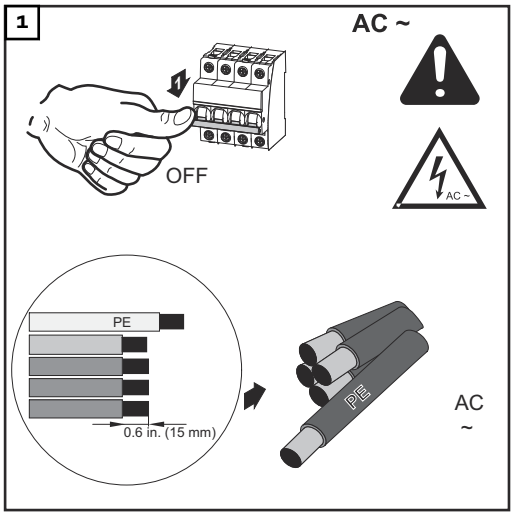

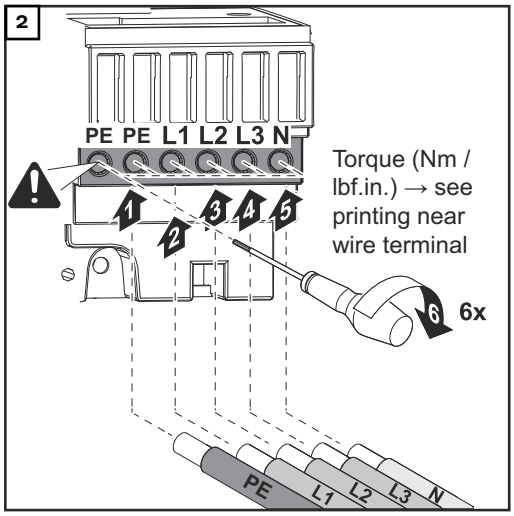

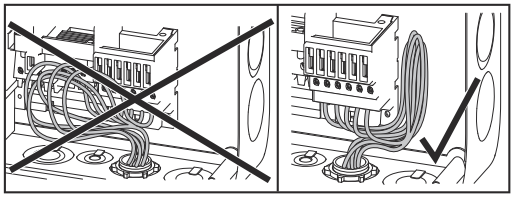

If AC cables are laid over the shaft of the DC main switch or across the DC main switch connection block, the cables may be damaged when the inverter is pivoted or the inverter may not be able to be pivoted.

IMPORTANT! Do not lay AC cables over the shaft of the DC main switch or across the DC main switch connection block!

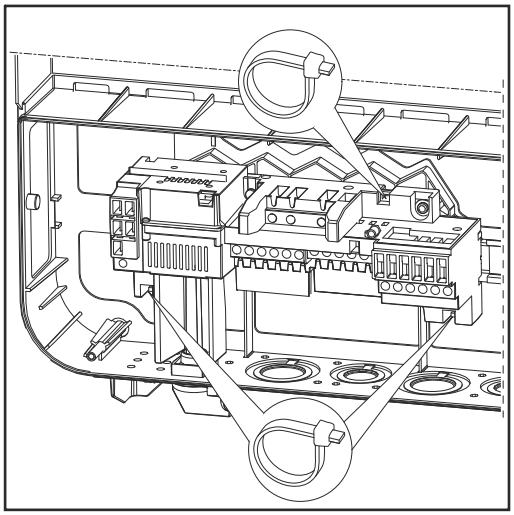

If excessively long AC or DC cables are laid in loops in the connection area, fix the cables to the designated eyelets at the top and bottom of the connection block using cable ties.

Maximum AC Fuse Protection

Power circuit breaker

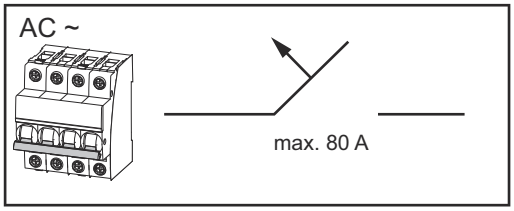

Inverter	Phases	AC power	Maximum fuse protection
Fronius Symo Advanced 10.0-3 208–240	3+N	10,000 W	80 A
Fronius Symo Advanced 12.0-3 208–240	3+N	12,000 W	80 A
Fronius Symo Advanced 15.0-3 480	3+N	15,000 W	80 A
Fronius Symo Advanced 20.0-3 480	3+N	20,000 W	80 A
Fronius Symo Advanced 22.7-3 480	3+N	22,700 W	80 A
Fronius Symo Advanced 24.0-3 480	3+N	24,000 W	80 A

RCCB

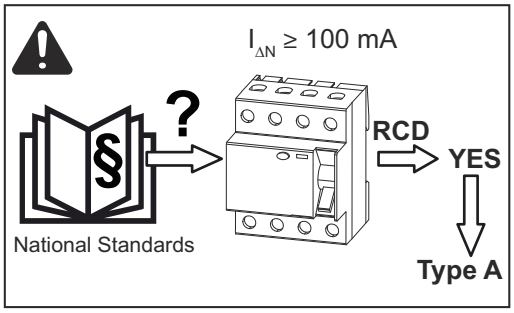

NOTE!

A residual current circuit breaker for the AC connecting cable may be required depending on local regulations, the grid operator, and other conditions.
A type A residual current circuit breaker with a trip current of at least 100 mA is generally sufficient in this case. However, false alarms can be triggered for the residual current circuit breaker type A in individual cases and depending on local conditions. For this reason, Fronius recommends that you use a residual current circuit breaker suitable for frequency converters.

Additional external AC and/or DC disconnect

Depending on the installation, an additional external AC and/or DC disconnect may be required if the inverter is installed in a location not easily accessible to utility or fire personnel. Contact your local authorities for additional information.

DC=

Connecting solar module strings to the inverter

Safety

⚠ WARNING!

Danger from grid voltage and DC voltage from solar modules that are exposed to light.
An electric shock can be fatal.
- ▶ Prior to all connection work, disconnect the AC and DC supply to the inverter.
- ▶ The DC main switch is used only to switch off power to the power stage set. When the DC main switch is turned off, the connection area is still energized.
- ▶ Maintenance and service work on the inverter power stage set should only be carried out by Fronius-trained service technicians.
- ▶ All maintenance and service work should only be carried out when the inverter and the mounting bracket have been disconnected from each other.
- ▶ The inverter must only be disconnected from the mounting bracket after being disconnected from the mains power.
- ▶ Only an authorized electrician is permitted to connect this inverter to the public grid.

⚠ WARNING!

Inadequately sized electrical components can cause serious injury and damage to property.
An electric shock can be fatal.
- ▶ All electrical connections must be made in accordance with the national standard (e.g., for the US National Electrical Code, ANSI/NFPA 70) and any other regulations applicable to the installation site.
- ▶ Use min. 194 °F (90 °C) copper wire for all grounding wires (see NEC table 250.122).
- ▶ For all AC/DC wires, use a minimum of 167 °F (75 °C).
- ▶ Voltage drop and other considerations, such as improving power quality, may mean larger cable cross sections need to be used.

⚠ WARNING!

Danger from work that is not carried out properly
This can result in damage to property and severe personal injury.
- ▶ The surge protection device should only be installed and connected by licensed electricians.
- ▶ Observe the safety rules!
- ▶ Prior to all installation and connection work, disconnect the AC and DC supply to the inverter.

⚠ CAUTION!

Danger due to improperly connected terminals.
This may result in thermal damage to the inverter, which in turn may lead to fires.
- ▶ When connecting the AC and DC cables, make sure that all terminals are tightened securely using the proper torque.

⚠ CAUTION!

Danger due to overloading on the inverter.
This may result in damage to the inverter.
- ▶ Observe the maximum current carrying capacity of the various power categories (see Table A).
- ▶ Connect the DC+ and DC- cables to the correct DC+ and DC- terminals on the inverter.
- ▶ Observe the maximum DC input voltage.

Table A	
Power category	Maximum current carrying capacity MPP1 / MPP2
10.0-3 208–240 / 12.0-3 208–240	25 A / 16.5 A
15.0-3 480 / 20.0-3 480 / 22.7-3 480 / 24.0-3 480	33 A / 25 A

NOTE!

Solar modules exposed to light supply current to the inverter.

NOTE!

When using the cable inlets at the back, take care to seal them according to protection class NEMA4X before operating outdoors.

NOTE!

When connecting aluminum cables:
- ▶ follow all national and international guidelines regarding the connection of aluminum cables
- ▶ follow the instructions of the cable manufacturer
- ▶ perform an annual check to ensure that the cables are firmly attached according to the proper torque

NOTE!

When connecting DC cables, ensure the polarity is correct.

NOTE!

Form a min. 4 in. (100 mm) cable loop with all cables.

String fuses

Only valid for the device types with the "Ecofuse" option:

The use of string fuses provides additional fuse protection for solar modules. The maximum short circuit current I_{SC}, the maximum module backfeed current I_R, and the specification of the maximum string fuse value in the module data sheet of the respective solar module are decisive factors in the protection of the solar module.

The maximum short circuit current I_{SC} per terminal is 15 A.

The string fuse release current can be set to greater than 15 A if required. However, a release current of 20 A must not be exceeded.

If the inverter is being operated with an external string collection box, the DC connector kit 25 (item numbers 42,0201,4479 for DC+ and 42,0201,4480 for DC-) must be used. In this case the solar modules are externally protected in the string collection box and the metal bolts should be used in the inverter.

National regulations regarding fuse protection must be observed. The electrical engineer carrying out the installation is responsible for the correct choice of string fuses.

⚠ CAUTION!

Danger due to defective fuses.
This can result in fires.
▶ Always replace defective fuses with new equivalent fuses.

The inverter is delivered with metal bolts as standard.

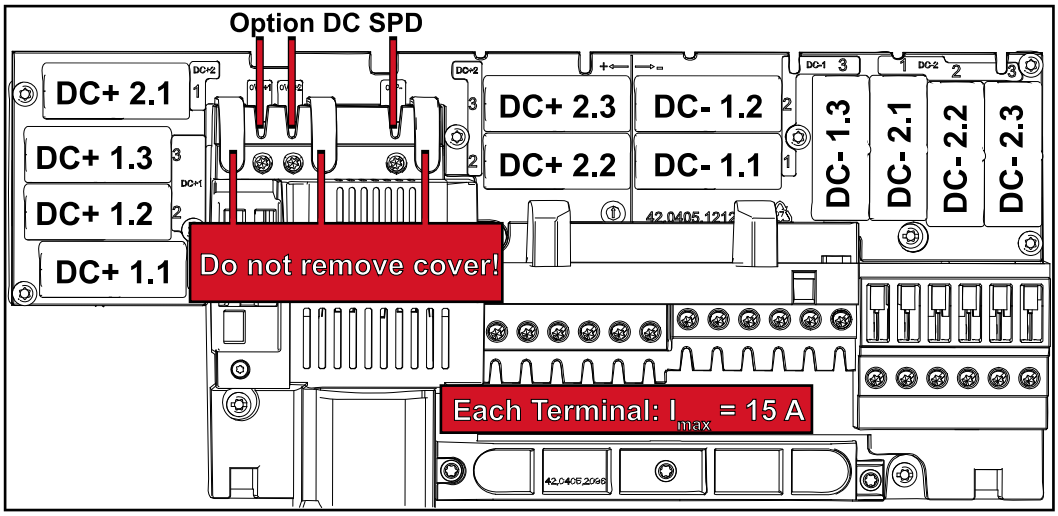

Permitted cables

AC cables with the following design can be connected to the AC terminals of the inverter:

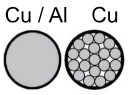

- Copper (Cu) or aluminum (Al): round, solid
- Copper: round, stranded

AC & DC = copper cables (Cu)
The following wire combinations can be used for wiring.
Select a sufficiently large cable cross-section based on the actual device output!

AWG round	AWG stranded	AWG stranded/round			AWG round/round				AWG stranded/stranded			
4 2)												
6 2)	6/6 4)									6/12 2)	6/14 2)	6/16 3)

AWG round	AWG stranded	AWG stranded/round			AWG round/round				AWG stranded/stranded			
8 [2]	8 [1]	8/10[1]	8/12[1]	8/14[1]		8/12[2]			8/10[2]	8/12[1]	8/14[1]	8/16[3]
10 [2]	10 [1]				10/10 [1]	10/12[1]	10/14 [1]		10/10 [1]	10/12[1]	10/14 [1]	10/16 [3]
12 [2]	12 [1]				12/10[1]	12/12[1]	12/14[1]	12/16[1]	12/10[1]	12/12[1]	12/14[1]	12/16[1]
14 [2]	14 [1]				14/10 [1]	14/12[1]	14/14[1]	14/16[1]	14/10 [1]	14/12[1]	14/14[1]	14/16[1]
16 [3]	16 [3]						16/14[1]	16/16[1]	16/10 [3]	16/12[1]	16/14[1]	16/16[1]

AC & DC = aluminum cables (Al)
The following wire combinations can be used for wiring.
Select a sufficiently large cable cross-section based on the actual device output!

AWG round	AWG stranded	AWG stranded/round			AWG round/round				AWG stranded/stranded			
4 [2]												
6 [2]	6 [4]									6/12[2]	6/14[2]	6/16[5]
8 [2]	8 [2]	8/10[2]	8/12[2]	8/14[2]		8/12[2]			8/10[2]	8/12[2]	8/14[2]	8/16[5]
10 [2]	10 [2]				10/10 [2]	10/12[2]	10/14[2]		10/10 [2]	10/12[2]	10/14[2]	10/16 [5]
12 [2]	12 [2]				12/10[2]	12/12[2]	12/14[2]		12/10[2]	12/12[2]	12/14[2]	12/16[2]
14 [2]	14 [2]				14/10[2]	14/12[2]	14/14[2]	14/16[2]	14/10[2]	14/12[2]	14/14[2]	14/16[2]
16 [5]	16 [5]						16/14[2]	16/16[2]	16/10 [5]	16/12[2]	16/14[2]	16/16[2]

1) tested and inspected as per UL
2) not inspected as per UL; connection possible
3) with ferrules only
4) use stranded PV (ZKLA) or 2-wire
5) not inspected as per UL; connection possible; AWG 16 with ferrules only

AC~ Minimum AWG in acc. to NEC

		10.0-3 208–240	12.0-3 208–240
Copper (Cu)/aluminum (Al)	208 VAC	AWG 10/AWG 10	AWG 10/AWG 8
	220 VAC	AWG 10/AWG 10	AWG 10/AWG 8
	240 VAC	AWG 12/AWG 10	AWG 10/AWG 10

		15.0-3 480	20.0-3 480	22.7-3 480
Copper (Cu)/aluminum (Al)	440 V AC	AWG 14/AWG 12	AWG 10/AWG 10	AWG 8/AWG 8
	480 V AC	AWG 14/AWG 12	AWG 12/AWG 10	AWG 10/AWG 8

		24.0-3 480
Copper (Cu)/aluminum (Al)	480 V AC	AWG 10/AWG 10

General Information about Solar Modules

In order to select suitable solar modules, observe the following points:

- The open circuit voltage of the solar modules increases as the temperature decreases, assuming constant irradiance. The open circuit voltage may not exceed the following values, depending on the altitude:

Symo Advanced 10.0-3 - 12.0-3 208–240

0	to	11,154 ft.	(0	to	3400 m)	=	600 V

Symo Advanced 15.0-3–24.0-3 480

0	to	6561 ft.	(0	to	2000 m)	=	1000 V
6531	to	8202 ft.	(2000	to	2500 m)	=	950 V
8202	to	9842 ft.	(2500	to	3000 m)	=	900 V
9842	to	11,154 ft.	(3000	to	3400 m)	=	850 V

- If the open circuit voltage exceeds the values stated above, the inverter may be damaged and all warranty rights will become null and void as the inverter records the last DC voltage in the system meaning that non-compliance with the maximum permitted limits can be checked.
- Note the temperature coefficients in the solar module data sheet
- More exact data for sizing the solar modules for the particular location can be obtained using calculation tools such as the Fronius Solar.creator (creator.fronius.com).
- See NEC table 690.7 for the appropriate voltage adjustment factor for crystalline silicon solar modules, or use the manufacturer's specified voltage coefficients.

NOTE!

Before connecting solar modules, make sure that the voltage specified by the manufacturer corresponds to the actual measured voltage.

▶ Note the safety instructions and specifications of the solar module manufacturer regarding solar module grounding.

Connecting Aluminum Cables

The DC-side terminals are designed for connecting single-wire, round aluminum cables. Due to the reaction of aluminum with air that creates a tough, non-conductive oxide layer the following points must be considered when connecting aluminum cables:

- Reduced rated currents for aluminum cables
- The connection requirements listed below

IMPORTANT! Always follow the instructions of the cable manufacturer when using aluminum cables.

IMPORTANT! Take into account local specifications when configuring cable cross sections.

Connection Requirements:

1 Carefully clean off the oxide layer of the stripped end of the cable, e.g. using a knife

IMPORTANT! Do not use brushes, files, or sandpaper; aluminum particles may get stuck and can transfer to other cables.

2 After removing the oxide layer of the cable end, rub in a neutral grease, e.g., acid-free and alkali-free Vaseline

3 Then immediately connect it to the terminal

IMPORTANT! Repeat the steps above whenever the cable is disconnected and then reconnected.

Connecting Solar Module Strings to the Inverter

⚠ CAUTION!

Danger due to incorrectly connected PV cables and voltage from the solar modules

This can result in damage to the inverter.

▶ Check the polarity and voltage of the solar module strings before connection. The voltage must not exceed the following values:

Symo 10.0-3 - 12.0-3 208-240
0-11,154 ft (0- 3400 m) = 600 V
Symo 15.0-3 - 24.0-3 480
0-6561 ft (0-2000 m) = 1000 V
6531- 8202 ft (2000-2500 m) = 950 V
8202-9842 ft (2500-3000 m) = 900 V
9842-11,154 ft (3000-3400 m) = 850 V

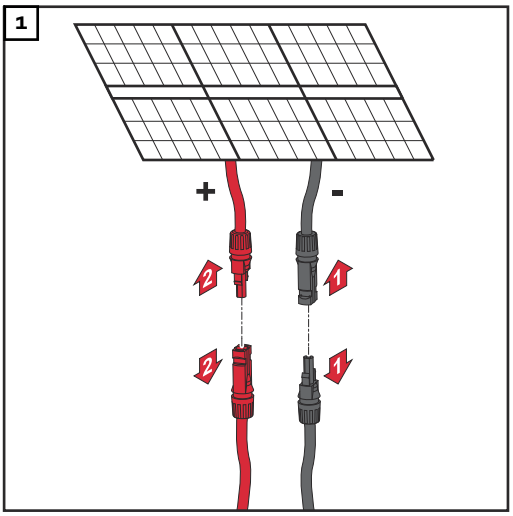

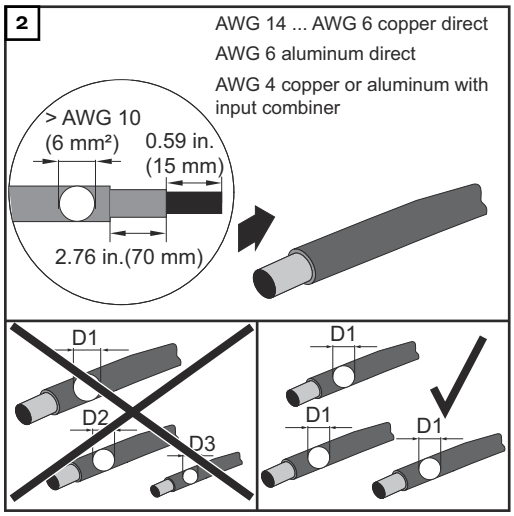

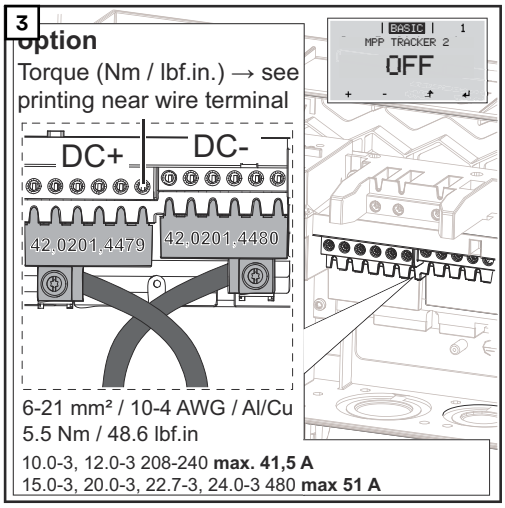

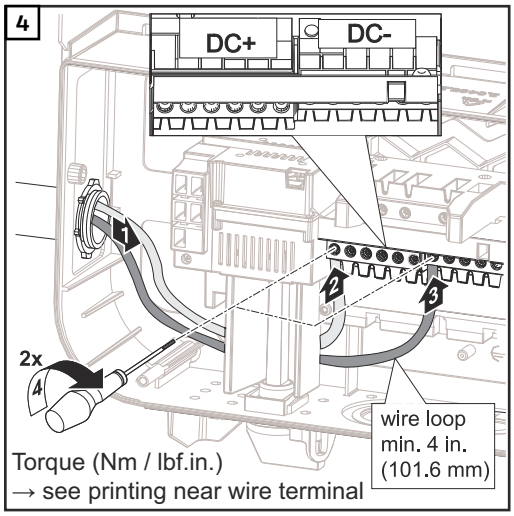

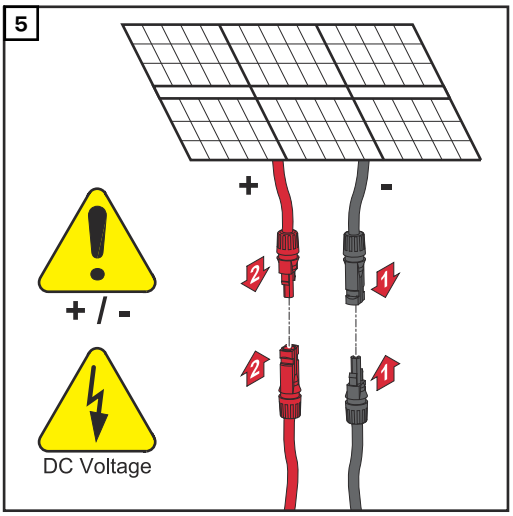

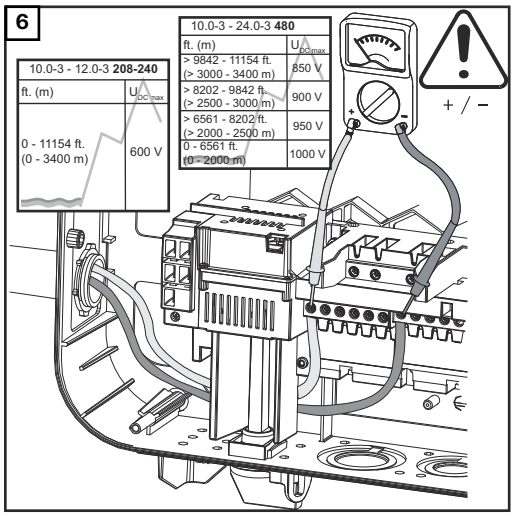

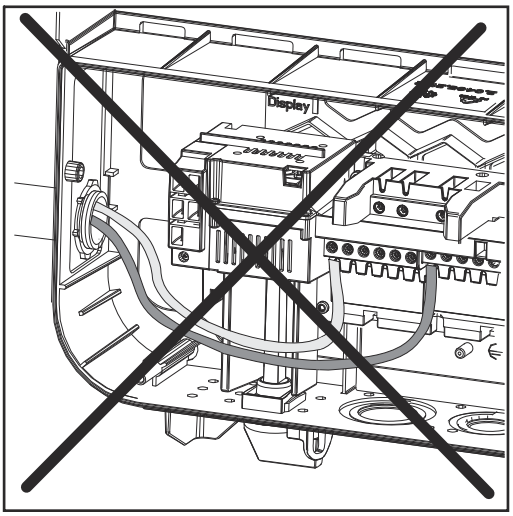

If DC cables are laid over the shaft of the DC main switch or across the DC main switch connection block, the cables may be damaged when the inverter is pivoted or the inverter may not be able to be pivoted.

IMPORTANT! Do not lay DC cables over the shaft of the DC main switch or across the DC main switch connection block!

Laying Solar.Net Cables

Data communication

Lay data communication cables

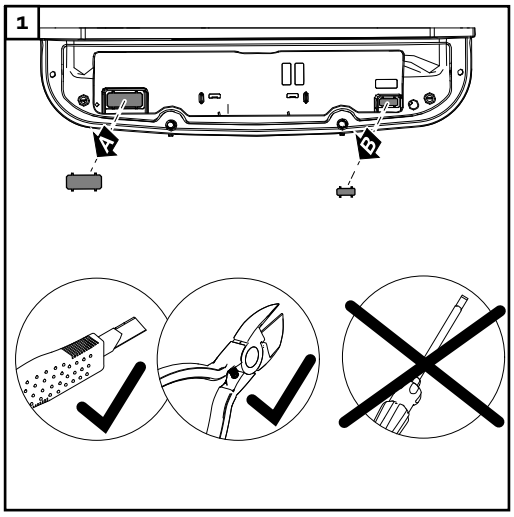

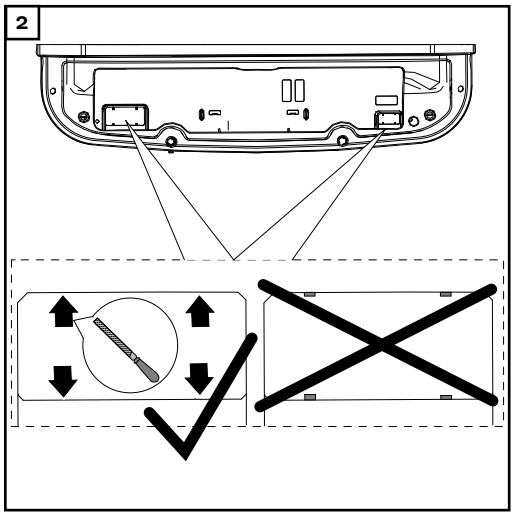

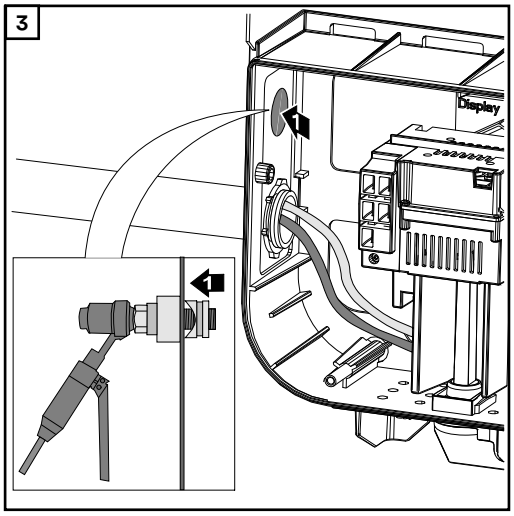

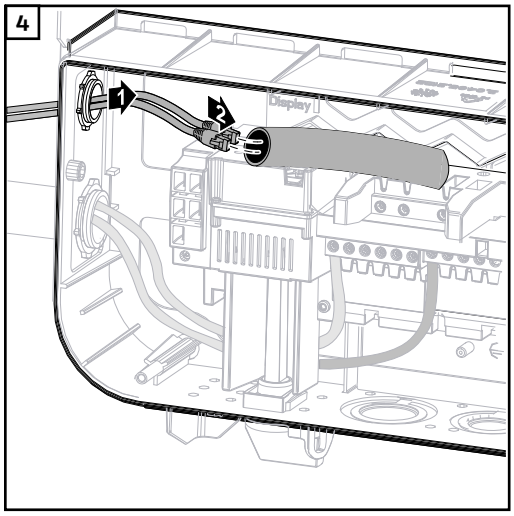

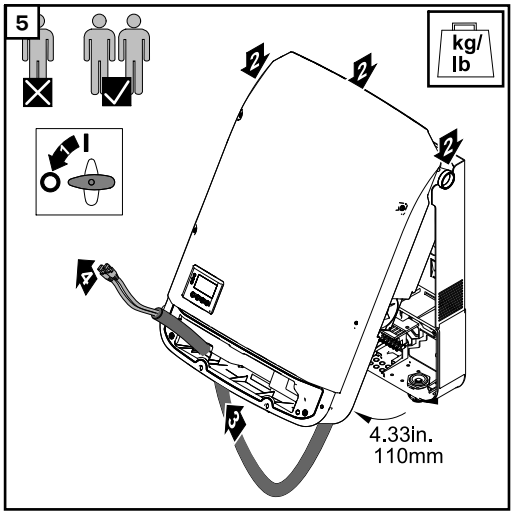

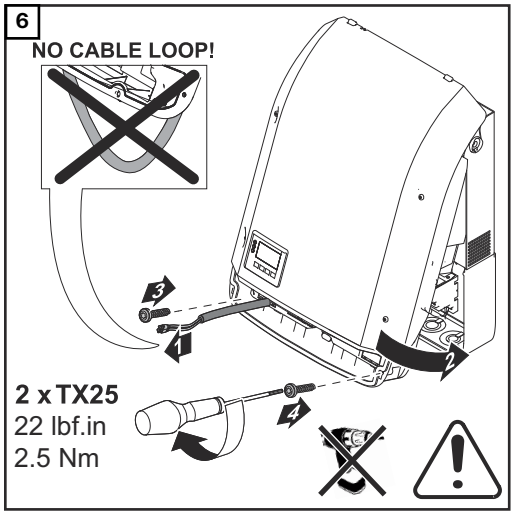

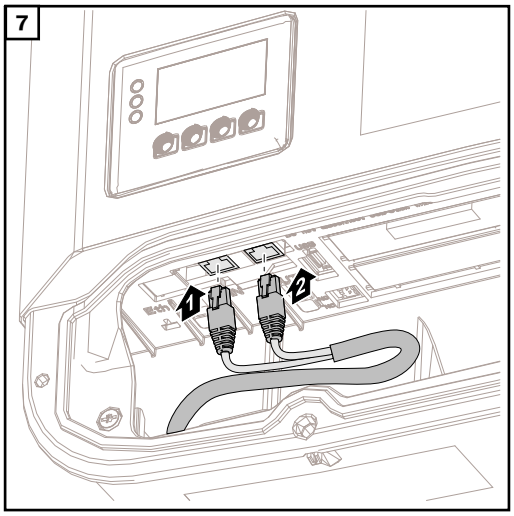

IMPORTANT! If data communication cables are wired into the inverter, observe the following points:

- Provide separate conduits for data communication cables
- Lay data communication cables in the supplied conduit
- Knock out the appropriate opening
- Cleanly deburr the knocked-out opening
- Clip the inverter onto the mounting bracket
- Guide the data communication cables through the cable glands from behind
- When pivoting the inverter, ensure that the cables are not trapped, kinked, or damaged in any other way. Do not loop the data communication cables.
- Lay the data communication cables in the data communication area of the inverter and connect to the Solar.Net "IN" and "OUT" connections.
  Plug the termination plugs into the remaining Solar.Net connections.

Installing Datamanager in the Inverter

⚠ WARNING!

Danger of residual voltage from capacitors.
An electric shock can be fatal.
▶ Wait until the capacitors have discharged. Discharge takes 5 minutes.

⚠ WARNING!

An inadequate ground conductor connection can cause serious injury and damage to property.
▶ The housing screws provide an adequate ground conductor connection for grounding the housing and should not be replaced under any circumstances by other screws that do not provide a reliable ground conductor connection.

IMPORTANT! Follow general ESD guidelines when handling option cards.

IMPORTANT! Only one Fronius Datamanager in master mode is permitted per Fronius Solar.Net Ring. Switch other Fronius Datamanagers to slave mode or remove them.
Unused option card slots can be closed by replacing the cover (item number 42,0405,2094), or an inverter without Fronius Datamanager (light version) can be used.

IMPORTANT! Only knock out one opening for the PC board when installing a data manager in the inverter.

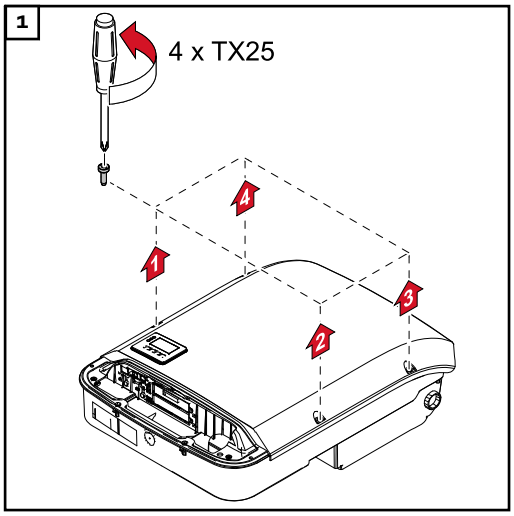

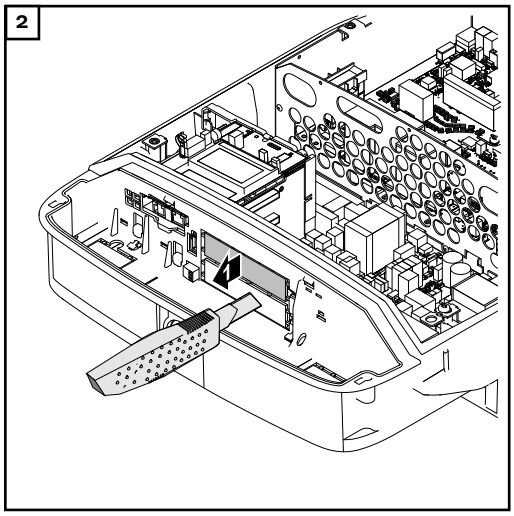

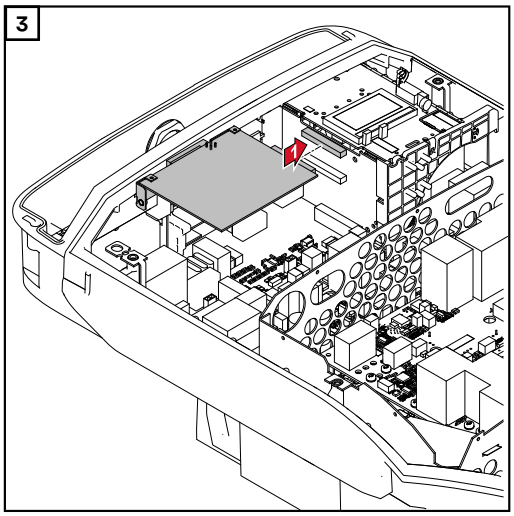

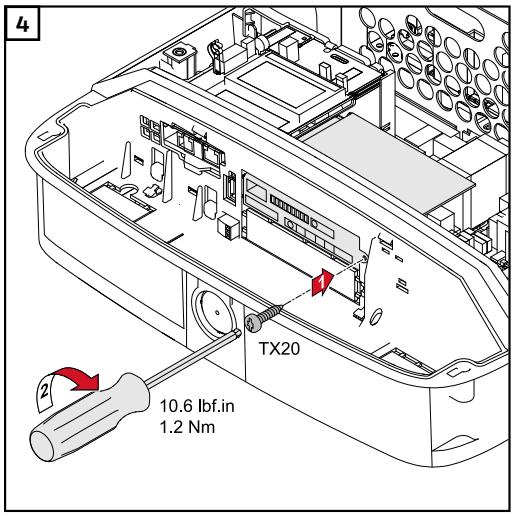

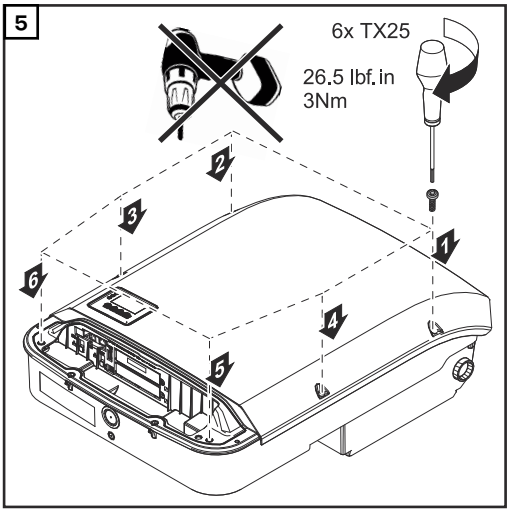

Fail-Safe

In the Fronius Solar Net ring (a combination of several inverters), the Fail-Safe function prevents inadmissible feeding of the connected inverters in the start-up phase or during operation. For this purpose, a signal is transmitted from the primary inverter with built-in data manager to the secondary inverters (Lite devices).

The function is activated as soon as the data manager fails or the Solar Net connection is interrupted. In this case, the signal is not transmitted to the secondary inverters. All devices switch off with status 710.

The following requirements must be met to enable the Fail-Safe to function correctly:

- For all inverters in the Solar Net ring, **Fail-Safe Mode** must be set to **Permanent** and **Fail-Safe Behaviour** to **Disconnect**.
- The inverter with data manager must be located in the last position of the ring line.

Correct wiring

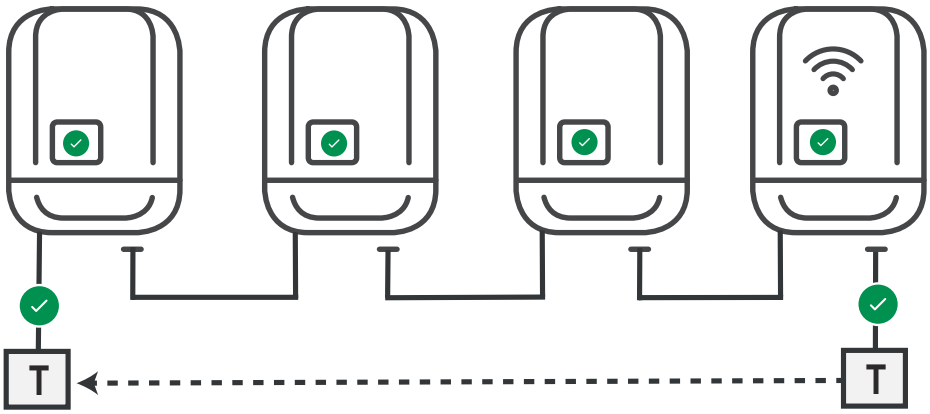

Function in the event of a fault

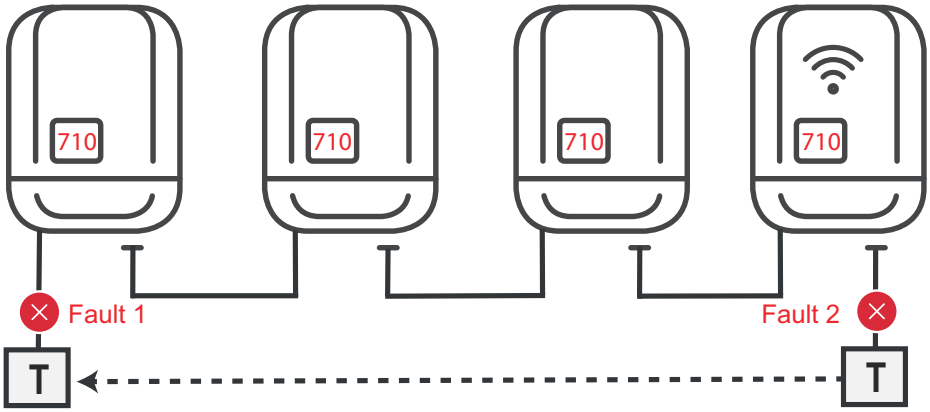

Faults occur at the beginning and end of the Solar Net ring – the primary inverter stops sending the signal, and secondary inverters switch off with status 710.

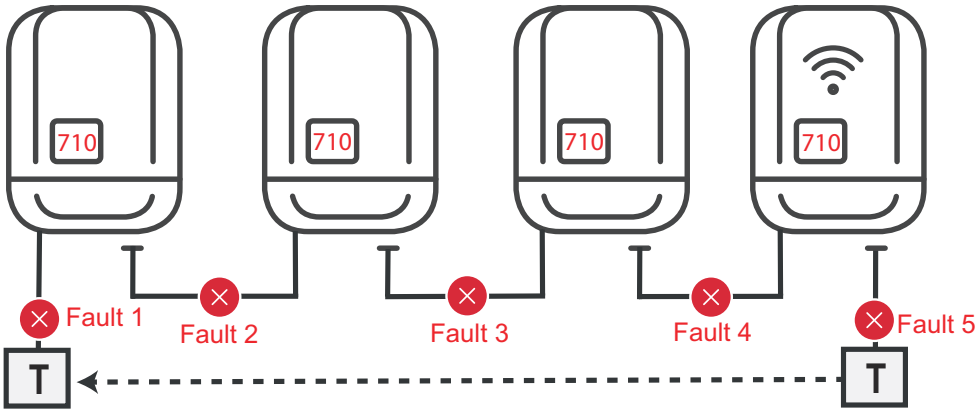

Faults occur at the beginning and end of the Solar Net ring or between the connected inverters – the primary inverter stops sending the signal, and secondary inverters switch off with status 710.

Finally...

Seal Conduits

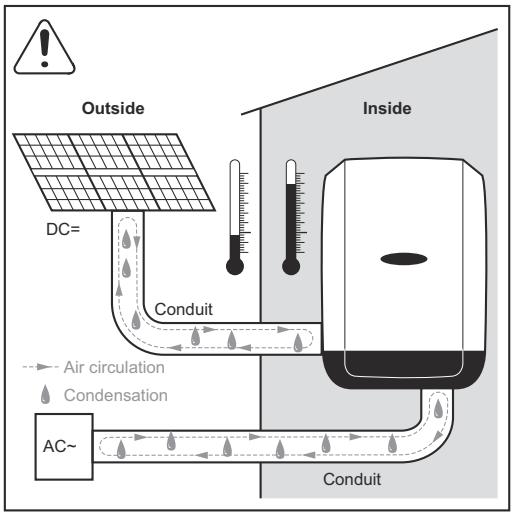

NOTE!

Condensation in the conduits can damage the inverter or the photovoltaic system components.

To avoid undesirable air circulation and condensation in the conduits:

- ▶ seal all conduits in use with a permanently elastic sealant
- ▶ seal every incoming and outgoing conduit
- ▶ seal both conduit ends.

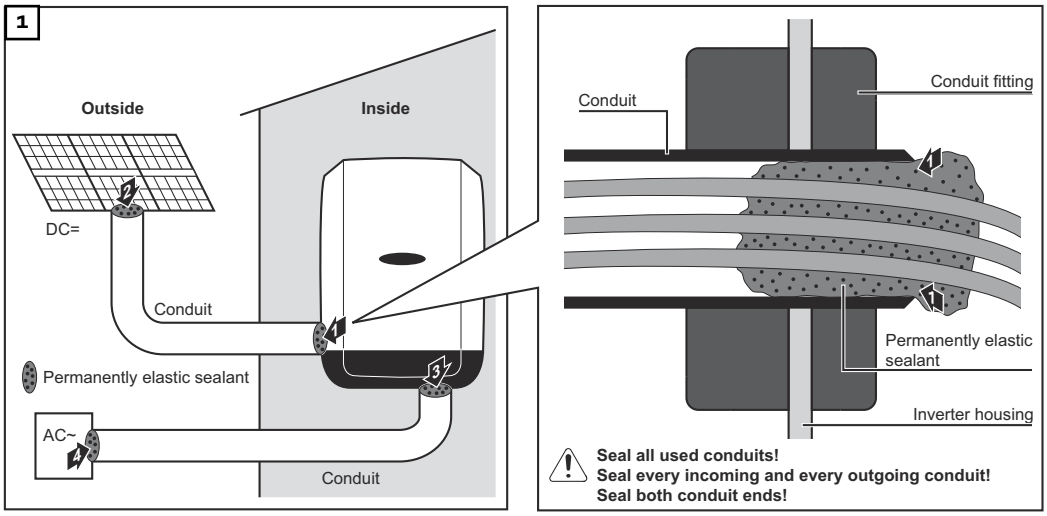

Clipping the Inverter onto the Mounting Bracket

Clipping the Inverter onto the Mounting Bracket

> ⚠ **WARNING!**
>
> **Danger due to inadequate ground conductor connection.**
> This can result in severe personal injury and damage to property.
> ▶ The housing screws provide an adequate ground conductor connection for grounding the housing and should not be replaced under any circumstances by other screws that do not provide a reliable ground conductor connection.

Due to the high weight, two people are required to clip the inverter into the mounting bracket.

> *NOTE!*
>
> **The inverter is fitted with a lock for safety reasons, which allows the inverter to be pivoted in the mounting bracket only when the DC main switch is off.**
> ▶ Only clip on and pivot the inverter in the mounting bracket when the DC main switch is off.
> ▶ Do not use excessive force to clip on the inverter and pivot it.

The fixing screws in the data communication area of the inverter are used to fix the inverter to the mounting bracket. Fixing screws must be properly tightened to ensure correct contact between the inverter and the mounting bracket.

> ⚠ **CAUTION!**
>
> **Danger due to improperly tightened fixing screws.**
> When the inverter is in operation, this can result the formation of arcs, which in turn may lead to fires.
> ▶ Always tighten the fixing screws with the specified torque.

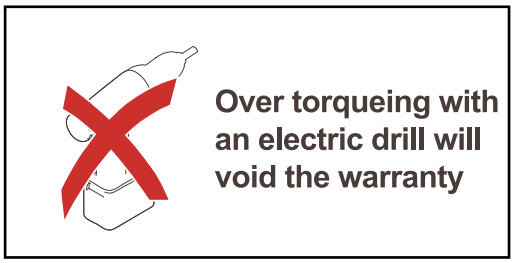

Use a torque screwdriver to insert the screws into the inverter. Do not use a conventional cordless screwdriver – the tightening torque will not be sufficiently accurate.

Before attaching the Datcom cover, check the seals on the back for damage. If there is damage, replacement covers (DatCom Cover Upgrade Kit) must be ordered.

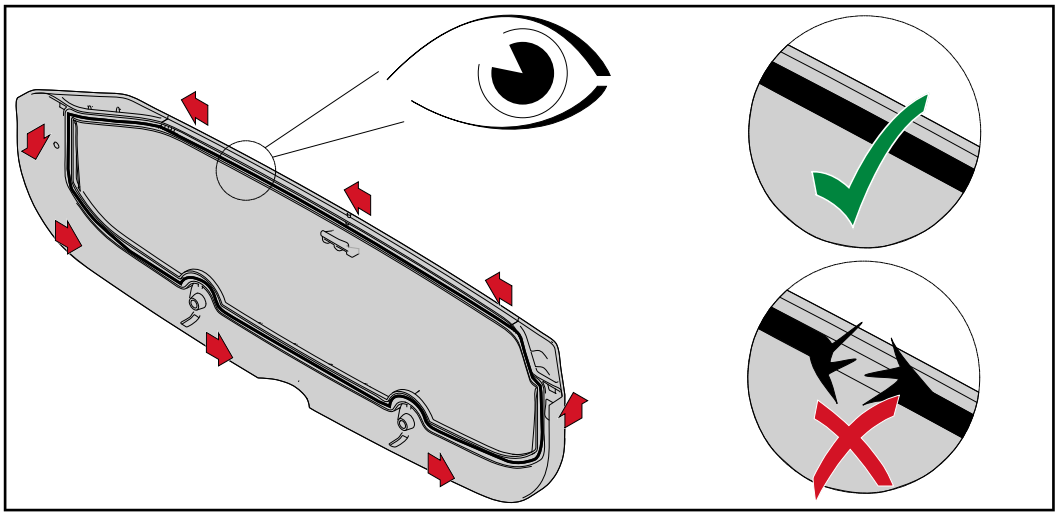

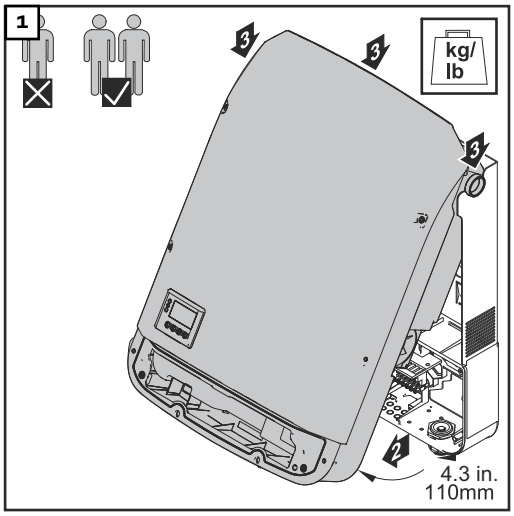
1
kg/
lb
4.3 in.
110mm

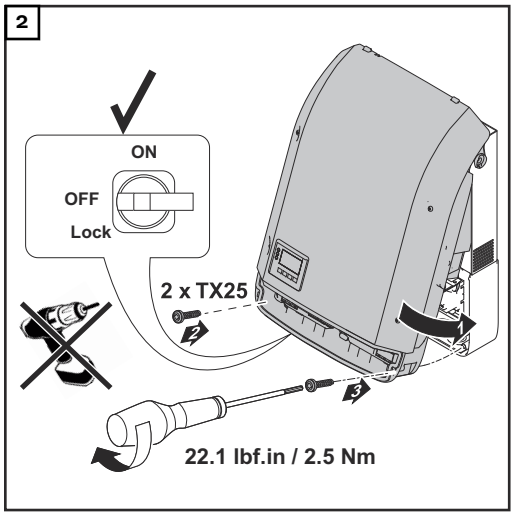
2
ON
OFF
Lock
2 x TX25
22.1 lbf.in / 2.5 Nm

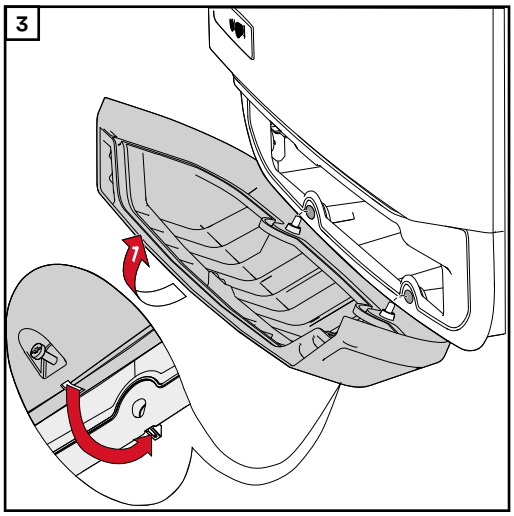
3

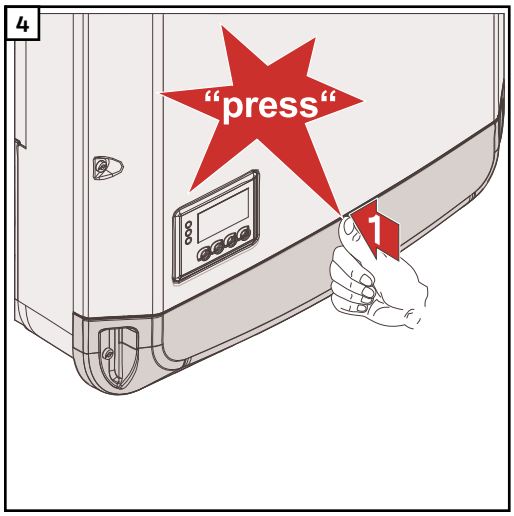
4
“press“
1

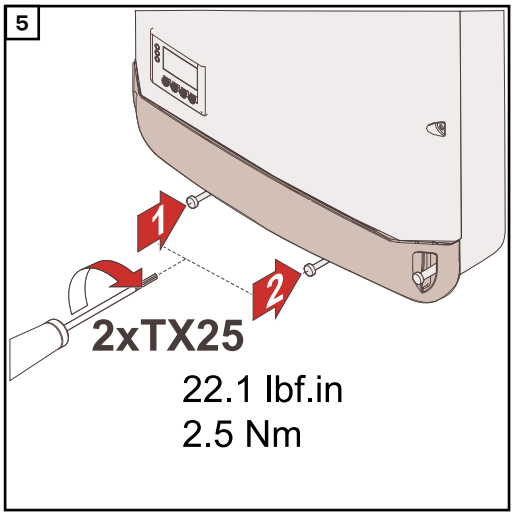
5
1
2
2xTX25
22.1 lbf.in
2.5 Nm

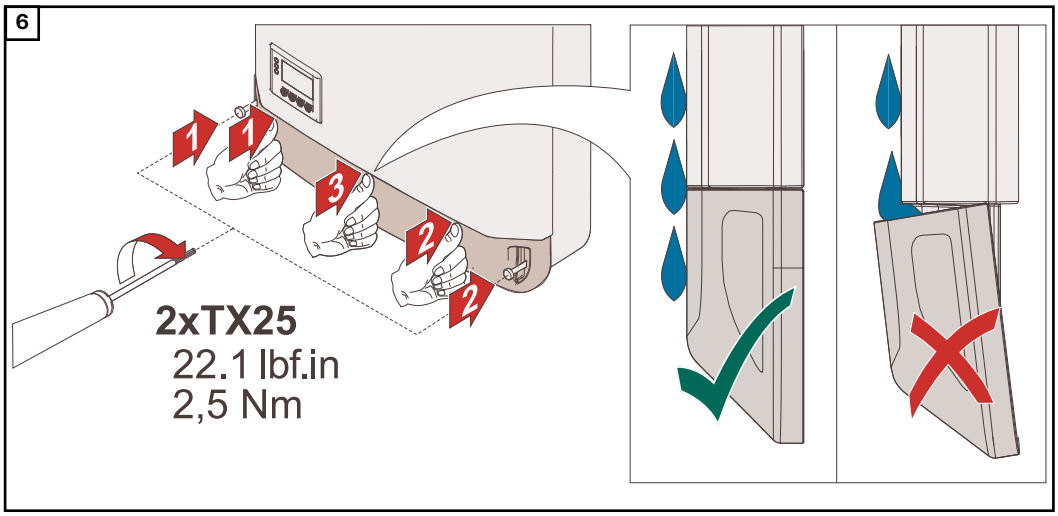
6
1
1
3
2
2
2xTX25
22.1 lbf.in
2,5 Nm

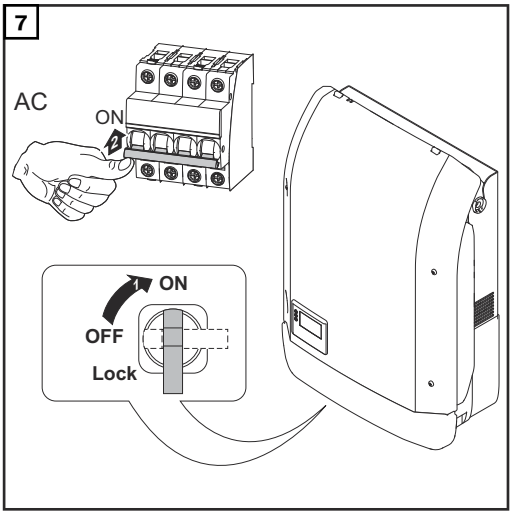
7
AC
ON
ON
OFF
Lock

Using for the first time

Using the Inverter for the First Time

> ⚠ **WARNING!**
>
> **Danger from incorrect operation and work that is not carried out properly.**
> This can result in severe personal injury and damage to property.
> ▶ Only qualified staff are authorized to commission the inverter and only within the scope of the respective technical regulations.
> ▶ Read the Installation Instructions and Operating Instructions before installation and commissioning.

When starting up the inverter for the first time, various setup settings must be selected.

If setup is stopped before it is completed, it can be started again via an AC reset. An AC reset can be carried out by switching the automatic circuit breaker off and on again.

The country setup can only be set when starting the inverter for the first time. If the country setup needs to be changed at a later date, contact your technical support.

* Country setup examples

The available country setups may change during a software update. Therefore, the following list may not exactly match the display on the inverter.

Setups:

Symo Advanced 208–240
240 N (with NL-Mon)
240 (without NL-Mon)
208 N (with NL-Mon)
208 (without NL-Mon)
220 N (with NL-Mon)
220 (without NL-Mon)
50 Hz
50 HN (with NL-Mon)
BR N (Brazil 220 V with NL-Mon)
BR (Brazil 220 V without NL-Mon)
HI1 (Hawaii 240 V with NL-Mon)
HI2 (Hawaii 208 V with NL-Mon)

Symo Advanced 208–240
MG1N* (Microgrid 240 V with NL-Mon)
MG1P* (Microgrid 240 V without NL-Mon)
MG2N* (Microgrid 220 V without NL-Mon)
MG3N* (Microgrid 208 V without NL-Mon)
MG3P* (Microgrid 208 V without NL-Mon)

Symo Advanced 480
480 N (with NL-Mon)
440 N (with NL-Mon)
50 HN (with NL-Mon)
CAL3 (California 480 V with NL-Mon)
HI3 (Hawaii with NL-Mon)
MG5N* (Microgrid 240 V with NL-Mon)
MG6* (Microgrid)

* For more information about **"Field Adjustable Trip Points"** and **"Special Purpose Utility-Interactive"** see

www.fronius.com/QR-link/42042102339

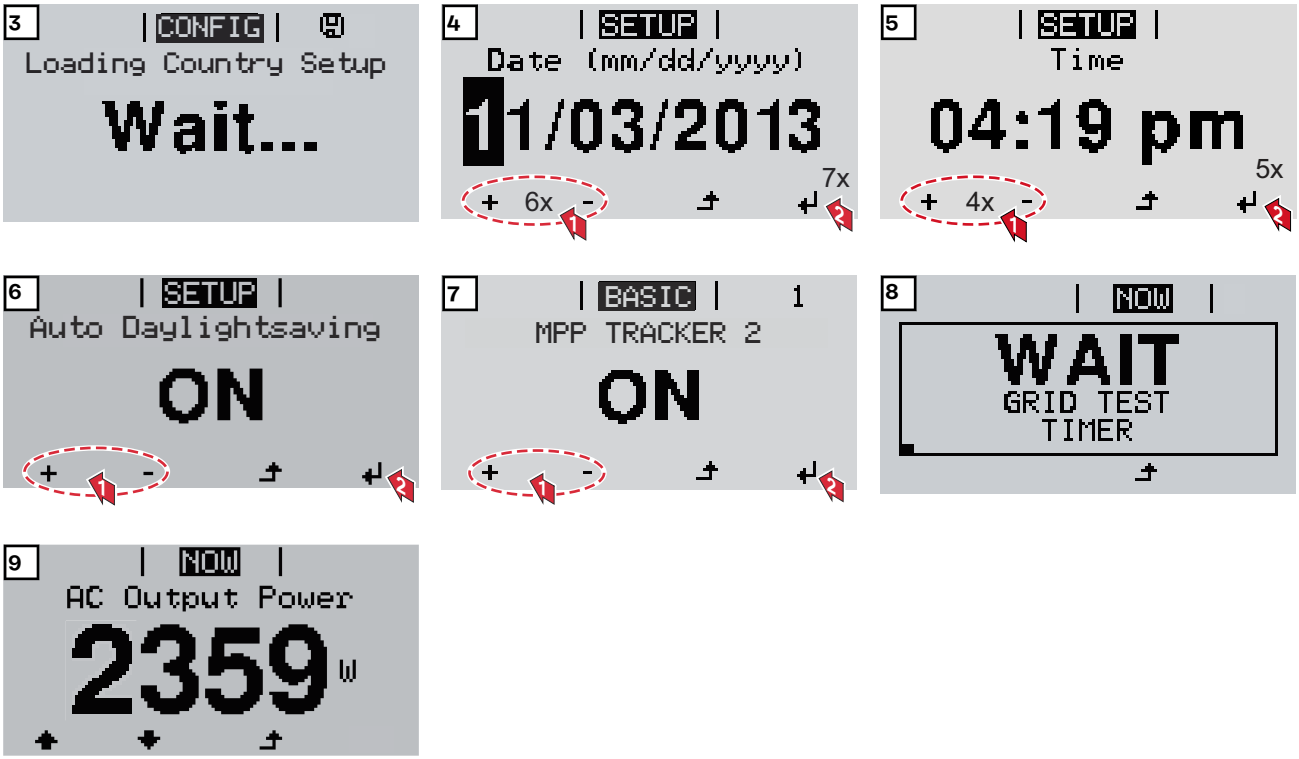

Options

USB Stick as a Data Logger and for Updating Inverter Software

USB Flash Drive as a Data Logger

A USB flash drive connected to the USB A socket can act as a data logger for an inverter.

The logging data that is saved on the USB flash drive can be viewed directly in third-party applications (e.g., Microsoft® Excel) at any time via the included CSV file.

Older Excel versions (up to Excel 2007) have a row limit of 65536.

Data on the USB thumb drive

If the USB thumb drive is used as a datalogger, three files are automatically created:

- FRONIUS.sys system file:
  This file saves information from the inverter that is irrelevant to the customer. The file must not be deleted separately. Only delete all files together (sys, fld, csv).

- DALO.fld log file:
  Log file for reading out data in Fronius Solar.access.

  You can find additional information on the Fronius Solar.access software in the "DATCOM Detail" Operating Instructions at http://www.fronius.com

- DATA.csv log file:
  A log file for reading out data in a spreadsheet program (e.g., Microsoft® Excel)

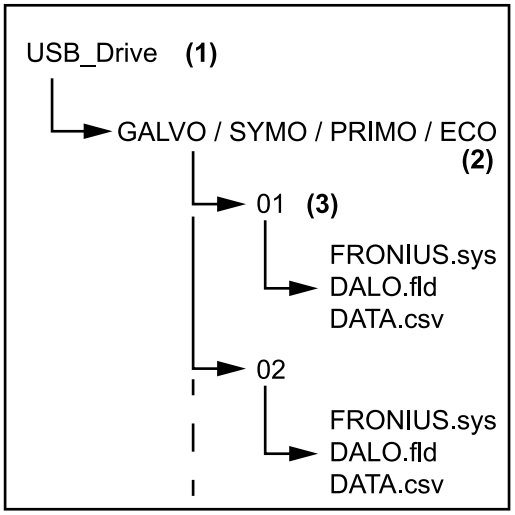

Data structure on the USB thumb drive

(1) USB root directory
(2) Fronius inverter (Fronius Galvo, Fronius Symo Advanced, Fronius Primo, or Fronius Eco)
(3) Inverter number – can be set in the setup menu under DATCOM

If multiple inverters exist with the same inverter number, the three files are saved in the same folder. A number is appended to the file name (e.g., DALO_02.fld)

Structure of the CSV file:

	(1)	(2)	(3)	(4)	(5)	(6)	(7)
	A	B	C	D	E	F	G	H
1	SerialNr.:1234567899874563	21'						
2	Date	Time	Inverter No.	Device Type	Periode [s]	Energy [Ws]	Energy L[Var]	Energy C[Var]
3	30.03.2013	17:15:19	1	247				
4	30.03.2013	17:15:19	1	247				
5	30.03.2013	17:15:19	1	247				
6	30.03.2013	17:15:20	1	247				

	(8)								(9)		
I	J	K	L	M	N	O	P		Q	R	S
Uac L1 [V]	Uac L2 [V]	Uac L3 [V]	Iac L1 [A]	Iac L2 [A]	Iac L3 [A]	Udc S1[V]	Idc S1[A]		Description		
									Display Information		
									V0.1.5 Build 0		
									28.03.2013 23:59:49 Info 017, Counter 0092		
									Logging Start		

(1) ID
(2) Inverter no.
(3) Inverter type (DATCOM code)
(4) Logging interval in seconds
(5) Energy in watt-seconds with reference to the logging interval
(6) Inductive reactive power
(7) Capacitive reactive power
(8) Averages over the logging interval (AC voltage, AC current, DC voltage, DC current)
(9) Additional information

Data Amount and Memory Capacity

One USB thumb drive with a memory capacity of 1 GB, for example, can record logging data at a logging interval of 5 minutes for approx. 7 years.

CSV file
CSV files can store only 65,535 rows (data records) (up to Microsoft® Excel version 2007, afterwards there is no limit).
At a logging interval of 5 minutes, the 65,535 rows are written within approx. 7 months (CSV data size of approx. 8 MB).
To avoid a loss of data, the CSV file should be backed up to a PC within these 7 months and deleted from the USB thumb drive. If the logging interval is set longer, this time frame is extended accordingly.

FLD file
The FLD file should not be larger than 16 MB. At a logging interval of 5 minutes, this corresponds to a storage duration of approx. 6 years.
If the file exceeds this 16 MB limit, it should be backed up to a PC, and all data should be deleted from the USB thumb drive.

After you have backed up the data and removed it from the USB thumb drive, the thumb drive should be immediately reinserted so that it can record logging data; no further steps are required.

ARC file
If the inverter recognizes an arc it will be logged in the ARC file.

NOTE!

A full USB thumb drive can lead to loss of data or overwriting of data.

When inserting the USB thumb drive, make sure that it has a sufficient memory capacity.

Buffer Memory

If the USB thumb drive is removed (e.g., to back up data), the logging data is written to a buffer memory in the inverter.
As soon as the USB thumb drive is reinserted, the data is automatically transferred from the buffer memory to the USB thumb drive.

The buffer memory can store a maximum of 6 logging points. Data is logged only during inverter operation (power greater than 0 W). The logging interval is set to 30 minutes. This results in a time span of 3 hours for recording data in the buffer memory.

When the buffer memory is full, the oldest data in the buffer memory is written over with the new data.

IMPORTANT! The buffer memory requires a constant power supply.
If there is an AC power outage during operation, all data in the buffer memory is lost. The automatic night switch-off must be deactivated so that data is not lost at night (set "Night Mode" to ON – see the Operating Instructions for Datamanager 2.0 and the sections "Setting and Displaying Menu Items," "Displaying and setting parameters in the 'DATCOM' menu item").

Suitable USB Thumb Drives

Due to the number of USB thumb drives on the market, we cannot guarantee that every USB thumb drive will be recognized by the inverter.

Fronius recommends using only certified, industrial USB thumb drives (look for the USB-IF logo).

The inverter supports USB thumb drives using the following file systems:
- FAT12
- FAT16
- FAT32

Fronius recommends that the USB thumb drive only be used for recording logging data or for updating the inverter software. USB thumb drives should not contain any other data.

USB symbol on the inverter display, e.g., in the 'NOW' display mode:

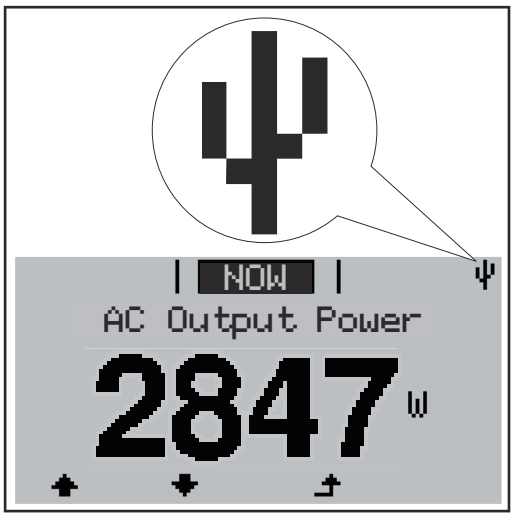

When the inverter recognizes a USB thumb drive, the USB symbol will appear at the top right of the display.

When inserting the USB thumb drive, make sure that the USB symbol is displayed (it may also be flashing).

IMPORTANT! Please be aware that in outdoor applications the USB thumb drive may only function in a limited temperature range.
Make sure, for example, that the USB thumb drive will also function at low temperatures for outdoor applications.

USB Stick for Updating Inverter Software

The USB stick can be used to help end customers update inverter software via the USB menu item in the SETUP menu item: the update file is first saved on the USB stick and then transferred to the inverter. The update file must be saved in the USB stick root directory.

Removing the USB Stick

Safety information for removing a USB stick

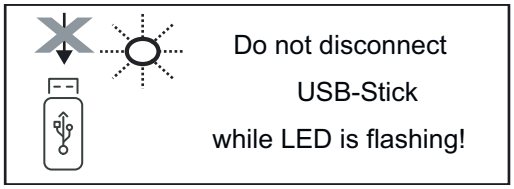

IMPORTANT! To prevent a loss of data, the connected USB stick should only be removed under the following conditions:

- via the SETUP and "Safely remove USB / hardware" menu items
- when the "Data Transfer" LED is no longer flashing or illuminated.

Options

Options

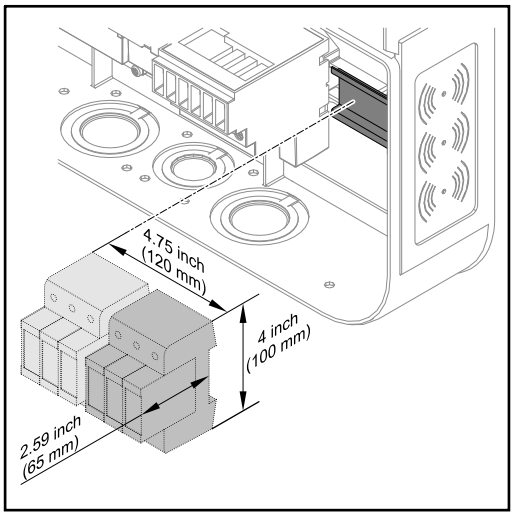

NOTE!

A DIN rail is provided in order to mount accessory electrical devices including, but not limited to, over-current protection, metering, radio or cellular modem.
Maximum size for mounting of all devices is 4 w x 4.75 l x 2.59 inches. The installer takes responsibility for any undesired effect on the inverter by installing an electrical device in this area. Caution should be taken when installing a device that may output significant amounts of heat or radio interference. Always ensure that the device does not inhibit the inverter from closing and sealing properly. Any questions about device eligibility should be directed toward technical support.

OPTION 'Shade-Cover'

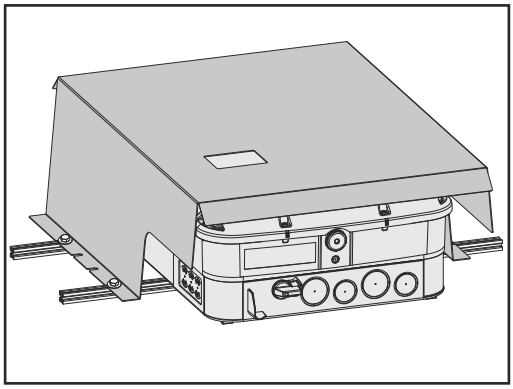

- Use the ShadeCover when the inverter is exposed to direct sunlight
- Use 4 screws for proper mounting

Care and maintenance

Notes on Maintenance

Maintenance

IMPORTANT! For a horizontal installation position and installation outside: perform an annual check to ensure that all screw connections are tightly fastened.

Maintenance and service work may only be carried out by Fronius-trained service technicians.

Cleaning

Wipe the inverter, if necessary, with a damp cloth.
Do not use cleaning agents, scouring agents, solvents, or similar products to clean the inverter.

fronius.com/en/solar-energy/installers-partners/products-solutions/monitoring-digital-tools

MONITORING &
DIGITAL TOOLS

Fronius International GmbH
Froniusstraße 1
4643 Pettenbach
Austria
contact@fronius.com
www.fronius.com

At www.fronius.com/contact you will find the contact details of all Fronius subsidiaries and Sales & Service Partners.